Date of Issue: May 2018

Affected Publication: API Specification 5L, *Line Pipe*, Forty-Sixth Edition, April 2018

Errata 1

Page 60, Table 22:

The top five rows of the table shall read like below. Cells surrounded by a red box contain updated values:

114.3 (4.500) to < 141.3 (5.563)	≥ 12.6 (0.495)	11.3 (0.445) to < 12.6 (0.495)	10.9 (0.429) to < 11.3 (0.445)	10.1 (0.396) to < 10.9 (0.429)
141.3 (5.563) to < 168.3 (6.625)	≥ 11.9 (0.469)	9.8 (0.387) to < 11.9 (0.469)	9.4 (0.370) to < 9.8 (0.387)	8.6 (0.338) to < 9.4 (0.370)
168.3 (6.625) to < 219.1 (8.625)	≥ 11.7 (0.460)	9.2 (0.361) to < 11.7 (0.460)	8.5 (0.333) to < 9.2 (0.361)	7.6 (0.301) to < 8.6 (0.333)
219.1 (8.625) to < 273.1 (10.750)	≥ 11.4 (0.449)	8.9 (0.350) to < 11.4 (0.449)	8.1 (0.317) to < 8.9 (0.350)	6.5 (0.257) to < 8.1 (0.317)
273.1 (10.750) to < 323.9 (12.750)	≥ 11.2 (0.442)	8.7 (0.343) to < 11.2 (0.442)	7.9 (0.310) to < 8.7 (0.343)	6.2 (0.245) to < 7.9 (0.310)

Line Pipe

API SPECIFICATION 5L
FORTY-SIXTH EDITION, APRIL 2018

API MONOGRAM PROGRAM EFFECTIVE DATE: MAY 1, 2019

ERRATA 1, MAY 2018



Special Notes

API publications necessarily address problems of a general nature. With respect to particular circumstances, local, state, and federal laws and regulations should be reviewed.

Neither API nor any of API's employees, subcontractors, consultants, committees, or other assignees make any warranty or representation, either express or implied, with respect to the accuracy, completeness, or usefulness of the information contained herein, or assume any liability or responsibility for any use, or the results of such use, of any information or process disclosed in this publication. Neither API nor any of API's employees, subcontractors, consultants, or other assignees represent that use of this publication would not infringe upon privately owned rights.

API publications may be used by anyone desiring to do so. Every effort has been made by the Institute to ensure the accuracy and reliability of the data contained in them; however, the Institute makes no representation, warranty, or guarantee in connection with this publication and hereby expressly disclaims any liability or responsibility for loss or damage resulting from its use or for the violation of any authorities having jurisdiction with which this publication may conflict.

API publications are published to facilitate the broad availability of proven, sound engineering and operating practices. These publications are not intended to obviate the need for applying sound engineering judgment regarding when and where these publications should be utilized. The formulation and publication of API publications is not intended in any way to inhibit anyone from using any other practices.

Any manufacturer marking equipment or materials in conformance with the marking requirements of an API standard is solely responsible for complying with all the applicable requirements of that standard. API does not represent, warrant, or guarantee that such products do in fact conform to the applicable API standard.

Classified areas may vary depending on the location, conditions, equipment, and substances involved in any given situation. Users of this specification should consult with the appropriate authorities having jurisdiction.

Users of this specification should not rely exclusively on the information contained in this document. Sound business, scientific, engineering, and safety judgment should be used in employing the information contained herein.

API is not undertaking to meet the duties of employers, manufacturers, or suppliers to warn and properly train and equip their employees, and others exposed, concerning health and safety risks and precautions, nor undertaking their obligations to comply with authorities having jurisdiction.

Information concerning safety and health risks and proper precautions with respect to particular materials and conditions should be obtained from the employer, the manufacturer or supplier of that material, or the material safety data sheet.

All rights reserved. No part of this work may be reproduced, translated, stored in a retrieval system, or transmitted by any means, electronic, mechanical, photocopying, recording, or otherwise, without prior written permission from the publisher. Contact the publisher, API Publishing Services, 1220 L Street, NW, Washington, DC 20005.

Copyright © 2018 American Petroleum Institute

Foreword

Nothing contained in any API publication is to be construed as granting any right, by implication or otherwise, for the manufacture, sale, or use of any method, apparatus, or product covered by letters patent. Neither should anything contained in the publication be construed as insuring anyone against liability for infringement of letters patent.

The verbal forms used to express the provisions in this specification are as follows:

— the term “shall” denotes a minimum requirement in order to conform to the standard;

— the term “should” denotes a recommendation or that which is advised but not required in order to conform to the standard;

— the term “may” is used to express permission or a provision that is optional;

— the term “can” is used to express possibility or capability.

Informative elements — As used in a standard, “informative” denotes elements that identify the document, introduce its content, and explain its background, development, and its relationship with other documents or provide additional information intended to assist the understanding or use of the document.

Normative elements — As used in a standard, “normative” denotes elements that describe the scope of the document and that set out provisions that are required to implement the standard.

This document was produced under API standardization procedures that ensure appropriate notification and participation in the developmental process and is designated as an API standard. Questions concerning the interpretation of the content of this publication or comments and questions concerning the procedures under which this publication was developed should be directed in writing to the Director of Standards, American Petroleum Institute, 1220 L Street, NW, Washington, DC 20005. Requests for permission to reproduce or translate all or any part of the material published herein should also be addressed to the Director.

Generally, API standards are reviewed and revised, reaffirmed, or withdrawn at least every 5 years. A one-time extension of up to 2 years may be added to this review cycle. Status of the publication can be ascertained from the API Standards Department, telephone (202) 682-8000. A catalog of API publications and materials is published annually by API, 1220 L Street, NW, Washington, DC 20005.

Suggested revisions are invited and should be submitted to the Standards Department, API, 1220 L Street, NW, Washington, DC 20005, standards@api.org.

Contents

1 Scope . . . 1
1.1 Coverage . . . 1
1.2 Application of the API Monogram . . . 1

2 Normative References . . . 1

3 Terms, Definitions, Symbols, and Abbreviations . . . 4
3.1 Terms and Definitions . . . 4
3.2 Symbols . . . 11
3.3 Abbreviations . . . 13

4 Conformity . . . 14
4.1 Units of Measurement . . . 14
4.2 Rounding . . . 14

5 Compliance to This Specification . . . 14
5.1 Quality . . . 14
5.2 Other Terms and Definitions . . . 15
5.3 References to Annexes . . . 15

6 Pipe Grades and Steel Grades, and Delivery Condition . . . 16
6.1 Pipe Grades and Steel Grades . . . 16
6.2 Delivery Condition . . . 16

7 Information to Be Supplied by the Purchaser . . . 18
7.1 General Information . . . 18
7.2 Additional Information . . . 18

8 Manufacturing . . . 22
8.1 Process of Manufacture . . . 22
8.2 Processes Requiring Validation . . . 24
8.3 Starting Material . . . 24
8.4 Tack Welds . . . 25
8.5 Weld Seams in COW Pipe . . . 26
8.6 Weld Seams in SAW Pipe . . . 26
8.7 Weld Seams in Double-seam Pipe . . . 26
8.8 Treatment of Weld Seams in EW and LW Pipe . . . 26
8.9 Cold Sizing and Cold Expansion . . . 26
8.10 Coil/Plate End Welds . . . 27
8.11 Jointers . . . 27
8.12 Heat Treatment . . . 27
8.13 Traceability . . . 27

9 Acceptance Criteria . . . 28
9.1 General . . . 28
9.2 Chemical Composition . . . 28
9.3 Tensile Properties . . . 31
9.4 Hydrostatic Test . . . 33
9.5 Bend Test . . . 33
9.6 Flattening Test . . . 33
9.7 Guided-bend Test . . . 33
9.8 CVN Impact Test for PSL 2 Pipe . . . 34
9.9 DWT Test for PSL 2 Welded Pipe . . . 35

Contents

9.10 Surface Conditions, Imperfections, and Defects . . . 36
9.11 Dimensions, Mass, and Tolerances . . . 37
9.12 Finish of Pipe Ends . . . 42
9.13 Tolerances for the Weld Seam . . . 44
9.14 Tolerances for Mass . . . 47
9.15 Weldability of PSL 2 Pipe . . . 48

10 Inspection . . . 48
10.1 Types of Inspection and Inspection Documents . . . 48
10.2 Specific Inspection . . . 49

11 Marking . . . 74
11.1 General . . . 74
11.2 Pipe Markings . . . 75
11.3 Coupling Markings . . . 77
11.4 Marking of Pipe to Multiple Grades . . . 78
11.5 Thread Identification and Certification . . . 78
11.6 Pipe Processor Markings . . . 78

12 Coatings and Thread Protectors . . . 79
12.1 Coatings and Linings . . . 79
12.2 Thread Protectors . . . 79

13 Retention of Records . . . 79

14 Pipe Loading . . . 80

Annex A (informative) API Monogram Program: Use of the API Monogram by Licensees . . . 81

Annex B (normative) Manufacturing Procedure Qualification for PSL 2 Pipe . . . 85

Annex C (normative) Treatment of Surface Imperfections and Defects . . . 90

Annex D (normative) Repair Welding Procedure . . . 92

Annex E (normative) Nondestructive Inspection for Pipe Not Required to Meet Annex H, J, or N . . . 99

Annex F (normative) Requirements for Couplings (PSL 1 Only) . . . 112

Annex G (normative) PSL 2 Pipe with Resistance to Ductile Fracture Propagation . . . 115

Annex H (normative) PSL 2 Pipe Ordered for Sour Service . . . 122

Annex I (normative) Pipe Ordered as TFL Pipe . . . 136

Annex J (normative) PSL 2 Pipe Ordered for Offshore Service . . . 138

Annex K (normative) Nondestructive Inspection for Pipe Ordered for Sour Service, Offshore Service, and/or Service Requiring Longitudinal Plastic Strain Capacity . . . 153

Annex L (informative) Steel Designations . . . 158

Annex M (normative) Specification for Welded Jointers . . . 160

Annex N (normative) PSL 2 Pipe Ordered for Applications Requiring Longitudinal Plastic Strain Capacity . 162

Annex O (informative) Additional Information for Use of the API Monogram by Licensees . . . 179

Contents

Annex P (informative) **Equations for Threaded and Coupled Pipe and Background Equations for Guided-bend and CVN Test Specimens** 181

Bibliography 192

Figures

1 Measuring Full-length Straightness 41
2 Measuring End Straightness 42
3 Reference When Using a Fixed Square Measurement 44
4 Dimensional Deviations of the Weld Seam 44
5 Sample and Test Piece Orientation and Locations 53
6 Flattening Tests 54
7 Location of Charpy Test Specimens 59
8 Guided-bend Test Pieces 60
9 Jigs for Guided-bend Test 64
C.1 Resultant Cavity of Weld Repair (PSL 2 Only) 91
D.1 Guided-bend Test Piece 96
F.1 Line Pipe and Coupling 114
H.1 Location of Hardness Tests 133
J.1 Location of Hardness Tests 150
M.1 Segment Identification Marking Sequence Example 161
N.1 Location of Hardness Tests 177
P.1 Threaded and Coupled Pipe. 182
P.2 Pipe Coupling. 183
P.3 Determination of Minimum Wall Thickness for Charpy Standard V-Notch Specimens 189
P.4 Determination of Minimum Wall Thickness for Tapered CVN Specimens 190

Tables

1 Pipe Grade and Steel Grades, and Acceptable Delivery Conditions. 17
2 Acceptable Process of Manufacture and PSLs 22
3 Acceptable Manufacturing Routes for PSL 2 Pipe 23
4 Chemical Composition for PSL 1 Pipe with $t \leq 25.0$ mm (0.984 in.). 29
5 Chemical Composition for PSL 2 Pipe with $t \leq 25.0$ mm (0.984 in.). 30
6 Requirements for the Results of Tensile Tests for PSL 1 Pipe 31
7 Requirements for the Results of Tensile Tests for PSL 2 Pipe 32
8 CVN Absorbed Energy Requirements for Pipe Body of PSL 2 Pipe 35
9 Permissible Specified Outside Diameter and Specified Wall Thickness 38
10 Tolerances for Diameter and Out-of-roundness 39
11 Tolerances for Wall Thickness. 40
12 Tolerances for Random Length Pipe. 41
13 Maximum Angle of Internal Taper for SMLS Pipe 43
14 Maximum Permissible Radial Offset for SAW and COW Pipe 46
15 Maximum Permissible Depth of Groove for EW and LW Pipe 46
16 Maximum Permissible Weld Bead Height for SAW and COW Pipe (Except at Pipe Ends). 47
17 Inspection Frequency for PSL 1 Pipe 50
18 Inspection Frequency for PSL 2 Pipe 51
19 Number, Orientation, and Location of Test Pieces per Sample for Mechanical Tests for PSL 1 Pipe. . . 55
20 Number, Orientation, and Location of Test Pieces per Sample for Mechanical Tests for PSL 2 Pipe. . . 56
21 Relationship between Pipe Dimensions and Round Bar Test Piece Diameter for Transverse Tensile Tests 57

Contents

22 Relationship between Pipe Dimensions and Required Impact Test Piece for PSL 2 Pipe 60
23 Strain Values for Guided-bend Test 65
24 Test Pressures for Light-wall Threaded Pipe 67
25 Test Pressures for Heavy-wall Threaded Pipe 68
26 Percentage of Specified Minimum Yield Strength for Determination of S 69
27 Paint Color 77
D.1 Guided-bend Test Jig Dimensions 97
E.1 Pipe Weld Seam Nondestructive Inspection 100
E.2 SMLS Pipe Body Nondestructive Inspection 100
E.3 ISO Wire-type IQI for Radiographic Inspection 102
E.4 ASTM Wire-type IQI for Radiographic Inspection 102
E.5 Elongated Slag-inclusion-type Imperfections 104
E.6 Circular Slag-inclusion-type and Gas-pocket-type Imperfections 104
E.7 Reference Indicators 106
E.8 Acceptance Limit 108
F.1 Coupling Dimensions, Masses, and Tolerances 113
G.1 Minimum CVN Absorbed Energy Requirements for a Design Factor of 0.625 118
G.2 Minimum CVN Absorbed Energy Requirements for a Design Factor of 0.72 119
G.3 Minimum CVN Absorbed Energy Requirements for a Design Factor of 0.80 120
H.1 Chemical Composition for Pipe with $t \leq 25.0$ mm (0.984 in.) 126
H.2 Requirements for the Results of Tensile Tests 127
H.3 Inspection Frequency 129
H.4 Number, Orientation, and Location of Test Pieces per Sample for Hardness Tests 130
I.1 Dimensions, Masses per Unit Length, and Test Pressures for TFL Pipe 137
I.2 Drift Mandrel Dimensions 137
J.1 Chemical Composition for Pipe with $t \leq 25.0$ mm (0.984 in.) 142
J.2 Requirements for the Results of Tensile Tests 143
J.3 Tolerances for Diameter and Out-of-roundness 145
J.4 Tolerances for Wall Thickness 146
J.5 Maximum Permissible Radial Offset for SAW Pipe 147
J.6 Inspection Frequency 148
J.7 Number, Orientation, and Location of Test Pieces per Sample for Mechanical Tests 149
K.1 Acceptance Criteria for Laminar Imperfections 155
L.1 List of Corresponding Additional Steel Designations (Steel Numbers) for Use in Europe 159
N.1 Chemical Composition for Pipe with $t \leq 25.0$ mm (0.984 in.) 166
N.2 Tolerances for Diameter and Out-of-roundness 169
N.3 Tolerances for Wall Thickness 170
N.4 Eccentricity at Pipe Ends for Seamless Pipe 170
N.5 Maximum Permissible Radial Offset for SAW Pipe 171
N.6 Inspection Frequency 172
N.7 Number, Orientation, and Location of Test Pieces per Sample for Mechanical Tests 174

Introduction

This specification is based on API Spec 5L, 45th Edition.

In the preparation of this document, the technical committee maintained the concept of two basic levels of standard technical requirements for line pipe expressed as two product specification levels (PSL 1 and PSL 2). Level PSL 1 provides a standard quality level for line pipe. Level PSL 2 has additional mandatory requirements for chemical composition, notch toughness and strength properties, and additional nondestructive testing. Requirements that apply to only PSL 1 or to only PSL 2 are so designated. Requirements that are not designated to a specific PSL designation apply to both PSL 1 and PSL 2 pipes.

The technical committee also recognized that the petroleum and natural gas industries often specify additional requirements for particular applications. In order to accommodate such needs, optional additional requirements for special applications are available, as follows:

— PSL 2 pipe ordered with a qualified manufacturing procedure (Annex B), the requirements of which have been enhanced to include verification detail of critical processes in the production of feedstock material, line pipe manufacture, and product testing and inspection;

— PSL 2 pipe ordered with resistance to ductile fracture propagation in gas pipelines (Annex G);

— PSL 2 pipe ordered for sour service (Annex H);

— pipe ordered as “through the flowline” pipe (Annex I);

— PSL 2 pipe ordered for offshore service (Annex J).

The following new annex has been added to this specification:

— PSL 2 Pipe Ordered for Applications Requiring Longitudinal Plastic Strain Capacity (Annex N).

The requirements of the annex apply only when specified on the purchase order.

When pipe is ordered for dual or multiple applications, the requirements of more than one annex for special applications can be invoked. In such instances, if a technical conflict arises due to applying the requirements of more than one annex for special applications, the most stringent requirement applicable to the intended service shall apply.

This specification does not provide guidance on when it is necessary to specify the above supplementary requirements. Instead, it is the responsibility of the purchaser to specify, based on the intended use and design requirements, which, if any, of the supplementary requirements apply for a particular purchase order.

Consideration has been given to traditional symbols (denoting mechanical or physical properties or their values, dimensions, or test parameters) and the format of equations that have been widely used and which (in their traditional format) maintain strong links with other widely used standards and specifications, and with the original scientific work that led to their derivation. Accordingly, some symbols and equations, most specifically those in 9.2 and Table F.1 and Annex P, have been retained in their traditional form to avoid causing confusion. Where changes have been made, care has been taken to ensure that the new symbol replacing the traditional one has been fully and clearly defined.

Line Pipe

1 Scope

1.1 Coverage

This specification specifies requirements for the manufacture of two product specification levels (PSL 1 and PSL 2) of seamless and welded steel pipe for use in pipeline transportation systems in the petroleum and natural gas industries.

This specification is not applicable to cast pipe.

1.2 Application of the API Monogram

If the product is manufactured at a facility licensed by the American Petroleum Institute (API) and is intended to be supplied bearing the API Monogram, the requirements of Annex A apply.

2 Normative References

The following referenced documents are indispensable for the application of this document. For dated references, only the edition cited applies. For undated references, the latest edition of the referenced document (including any addenda or errata) applies.

API Recommended Practice 5A3, *Thread Compounds for Casing, Tubing, and Line Pipe*

API Recommended Practice 5L3, *Drop-Weight Tear Tests on Line Pipe*

API Specification 5B, *Threading, Gauging, and Thread Inspection of Casing, Tubing, and Line Pipe Threads*

API Standard 5T1, *Imperfection Terminology*

ASNT SNT-TC-1A [1], *Recommended Practice No. SNT-TC-1A — Non-Destructive Testing*

ASTM A370 [2], *Standard Test Methods and Definitions for Mechanical Testing of Steel Products*

ASTM A435, *Standard Specification for Straight-Beam Ultrasonic Examination of Steel Plates*

ASTM A578, *Standard Specification for Straight-Beam Ultrasonic Examination of Plain and Clad Steel Plates for Special Applications*

ASTM A751, *Standard Test Methods, Practices, and Terminology for Chemical Analysis of Steel Products*

ASTM A941, *Standard Terminology Relating to Steel, Stainless Steel, Related Alloys, and Ferroalloys*

ASTM A956, *Standard Test Method for Leeb Hardness Testing of Steel Products*

---

[1] American Society for Nondestructive Testing, 1711 Arlingate Lane, Columbus, Ohio 43228, https://www.asnt.org.

[2] ASTM International, 100 Barr Harbor Drive, West Conshohocken, Pennsylvania 19428, https://www.astm.org.

ASTM A1038, *Standard Practice for Portable Hardness Testing by the Ultrasonic Contact Impedance Method*

ASTM E18, *Standard Test Methods for Rockwell Hardness and Rockwell Superficial Hardness of Metallic Materials*

ASTM E92, *Standard Test Methods for Vickers Hardness and Knoop Hardness of Metallic Materials*

ASTM E94, *Standard Guide for Radiographic Examination*

ASTM E110, *Standard Test Method for Indentation Hardness of Metallic Materials by Portable Hardness Testers*

ASTM E114, *Standard Practice for Ultrasonic Pulse-Echo Straight-Beam Examination by the Contact Method*

ASTM E164, *Standard Practice for Contact Ultrasonic Testing of Weldments*

ASTM E165, *Standard Test Method for Liquid Penetrant Examination*

ASTM E213, *Standard Practice for Ultrasonic Examination of Metal Pipe and Tubing*

ASTM E273, *Standard Practice for Ultrasonic Examination of the Weld Zone of Welded Pipe and Tubing*

ASTM E309, *Standard Practice for Eddy-Current Examination of Steel Tubular Products Using Magnetic Saturation*

ASTM E570, *Standard Practice for Flux Leakage Examination of Ferromagnetic Steel Tubular Products*

ASTM E587, *Standard Practice for Ultrasonic Angle-Beam Contact Testing*

ASTM E709, *Standard Guide for Magnetic Particle Examination*

ASTM E747, *Standard Practice for Design, Manufacture and Material Grouping Classification of Wire Image Quality Indicators (IQI) Used for Radiology*

ASTM E1806, *Standard Practice for Sampling Steel and Iron for Determination of Chemical Composition*

ASTM E1815-08, *Standard Test Method for Classification of Film Systems for Industrial Radiography*

ASTM E1820, *Standard Test Method for Measurement of Fracture Toughness*

ASTM E2033, *Standard Practice for Computed Radiology (Photostimulable Luminescence Method)*

ASTM E2698, *Standard Practice for Radiological Examination Using Digital Detector Arrays*

ASTM G39, *Standard Practice for Preparation and Use of Bent-Beam Stress-Corrosion Test Specimens*

BS 7448-1 [3], *Fracture mechanics toughness tests — Method for determination of KIc, critical CTOD and critical J values of metallic materials*

EN 10168 [4], *Steel products — Inspection documents — List of information and description*

---

[3] BSI, 389 Chiswick High Road, London, W4 4AL, United Kingdom, https://www.bsigroup.com.

[4] European Committee for Standardization (CEN), Management Centre, Rue de la Science 23, B - 1040 Brussels, Belgium, https://www.cen.eu.

EN 10204:2004, *Metallic products — Types of inspection documents*

ISO 148-1 [5], *Metallic materials — Charpy pendulum impact test — Part 1: Test method*

ISO 404, *Steel and steel products — General technical delivery requirements*

ISO 2566-1, *Steel — Conversion of elongation values — Part 1: Carbon and low alloy steels*

ISO 4885, *Ferrous products — Heat treatments — Vocabulary*

ISO 5173, *Destructive tests on welds in metallic materials — Bend tests — Third Edition*

ISO 6506 (all parts), *Metallic materials — Brinell hardness test*

ISO 6507 (all parts), *Metallic materials — Vickers hardness test*

ISO 6508 (all parts), *Metallic materials — Rockwell hardness test*

ISO 6892-1, *Metallic materials — Tensile testing — Part 1: Method of test at ambient temperature*

ISO 6929, *Steel products — Definitions and classification*

ISO 7539-2, *Corrosion of metals and alloys — Stress corrosion testing — Part 2: Preparation and use of bent-beam specimens*

ISO 8491, *Metallic materials — Tube (in full section) — Bend test*

ISO 8492, *Metallic materials — Tube — Flattening test*

ISO 8501-1, *Preparation of steel substrates before application of paints and related products — Visual assessment of surface cleanliness — Part 1: Rust grades and preparation grades of uncoated steel substrates and of steel substrates after overall removal of previous coatings*

ISO 9712, *Non-destructive testing — Qualification and certification of personnel*

ISO 9769, *Steel and iron — Review of available methods of analysis*

ISO 10474:1991, *Steel and steel products — Inspection documents*

ISO 10893-2, *Non-destructive testing of steel tubes — Part 2: Automated eddy current testing of seamless and welded (except submerged arc welded) steel tubes for the detection of imperfections*

ISO 10893-3, *Non-destructive testing of steel tubes — Part 3: Automated full peripheral flux leakage testing of seamless and welded (except submerged arc welded) ferromagnetic steel tubes for the detection of longitudinal and/or transverse imperfections*

ISO 10893-4, *Non-destructive testing of steel tubes — Part 4: Liquid penetrant inspection of seamless and welded steel tubes for the detection of surface imperfections*

ISO 10893-5, *Non-destructive testing of steel tubes — Part 5: Magnetic particle inspection of seamless and welded steel tubes for the detection of surface imperfections*

ISO 10893-6, *Non-destructive testing of steel tubes — Part 6: Radiographic testing of the weld seam of welded steel tubes for the detection of imperfections*

---

[5] International Organization for Standardization, Chemin de Blandonnet 8, CP 401, 1214 Vernier, Geneva, Switzerland, www.iso.org.

ISO 10893-7, *Non-destructive testing of steel tubes — Part 7: Digital radiographic testing of the weld seam of welded steel tubes for the detection of imperfections*

ISO 10893-8, *Non-destructive testing of steel tubes — Part 8: Automated ultrasonic testing of seamless and welded steel tubes for the detection of laminar imperfections*

ISO 10893-9, *Non-destructive testing of steel tubes — Part 9: Automated ultrasonic testing for the detection of laminar imperfections in strip/plate used for manufacture of welded steel tubes*

ISO 10893-10, *Non-destructive testing of steel tubes — Part 10: Automated full peripheral ultrasonic testing of seamless and welded (except submerged arc welded) steel tubes for the detection of longitudinal flash and/or transverse imperfections*

ISO 10893-11, *Non-destructive testing of steel tubes — Part 11: Automated ultrasonic testing of the weld seam of welded steel tubes for the detection of longitudinal and/or transverse imperfections*

ISO 10893-12, *Non-destructive testing of steel tubes — Part 12: Automated full peripheral ultrasonic thickness testing of seamless and welded (except submerged arc welded) steel tubes*

ISO 11484, *Steel products — Employer's qualification system for non-destructive testing (NDT) personnel*

ISO 11699-1:2008, *Non-destructive testing — Industrial radiographic films — Part 1: Classification of film systems for industrial radiography*

ISO 12135, *Metallic materials — Unified method of test for the determination of quasistatic fracture toughness*

ISO 12737, *Metallic materials — Determination of plane-strain fracture toughness*

ISO 13678, *Petroleum and natural gas industries — Evaluation and testing of thread compounds for use with casing, tubing and line pipe*

ISO 14284, *Steel and iron — Sampling and preparation of samples for the determination of chemical composition*

ISO 15653, *Metallic materials—Method of test for the determination of quasistatic fracture toughness of welds*

ISO 19232-1:2004, *Non-destructive testing — Image quality of radiographs — Part 1: Image quality indicators (wire type) — Determination of image quality value*

ISO 80000-1:2009/Cor 1:2011, *Quantities and units — Part 1: General*

NACE TM0177 [6], *Laboratory Testing of Metals for Resistance to Sulfide Stress Cracking and Stress Corrosion Cracking in H_2S Environments*

NACE TM0284, *Standard Test Method — Evaluation of Pipeline and Pressure Vessel Steels for Resistance to Hydrogen-Induced Cracking*

3 Terms, Definitions, Symbols, and Abbreviations

3.1 Terms and Definitions

For the purposes of this specification, the following terms and definitions apply.

---

[6] NACE International, 15835 Park Ten Place, Houston, Texas 77084, https://www.nace.org.

3.1.1
as agreed
Requirement to be as agreed upon by the manufacturer and the purchaser, and specified in the purchase order.

NOTE Associated, for example, with items covered by 7.2 a).

3.1.2
as-rolled
Delivery condition without any special rolling and/or heat treatment.

3.1.3
coil/plate end weld
Weld that joins coil or plate ends together.

3.1.4
cold-expanded pipe
Pipe that, while at ambient mill temperature, has received a permanent increase in outside diameter or circumference throughout its length, by internal hydrostatic pressure in closed dies or by an internal expanding mechanical device.

3.1.5
cold-sized pipe
Pipe that, after forming (including sizing on EW), while at ambient mill temperature, has received a permanent increase in outside diameter or circumference for all or part of its length, or permanent decrease in outside diameter or circumference for all or part of its length.

3.1.6
cold finishing
Cold-working operation (normally cold drawing) with a permanent strain greater than 1.5 %.

NOTE The amount of permanent strain generally differentiates it from cold expansion and cold sizing.

3.1.7
cold forming
Process in which a strip or plate is formed into a pipe without heating.

3.1.8
continuous welding
CW
Process of forming a seam by heating the strip in a furnace and mechanically pressing the formed edges together, wherein successive coils of strip had been joined together to provide a continuous flow of strip for the welding mill.

3.1.9
COW pipe
combination welded pipe
Tubular product having one or two longitudinal seams or one helical seam, produced by a combination of gas metal arc and submerged arc welding, wherein the gas metal arc weld bead is not completely removed by the submerged arc welding passes.

3.1.10
COWH pipe
combination helical welded pipe
Tubular product having one helical seam produced by a combination of gas metal arc and submerged arc welding, wherein the gas metal arc weld bead is not completely removed by the submerged arc welding passes.

3.1.11
COWL pipe
combination longitudinal welded pipe
Tubular product having one or two longitudinal seams produced by a combination of gas metal arc and submerged arc welding, wherein the gas metal arc weld bead is not completely removed by the submerged arc welding passes.

3.1.12
COW seam
combination welding seam
Longitudinal or helical seam produced by a combination of gas metal arc and submerged arc welding, wherein the gas metal arc weld bead is not completely removed by the submerged arc welding passes.

3.1.13
CW pipe
continuous welded pipe
Tubular product having one longitudinal seam produced by continuous welding.

3.1.14
daughter coil
Portion of steel removed via slitting, cutting, or shearing from the mother coil that is used to produce one or more pieces of pipe.

3.1.15
daughter plate
Portion of steel removed via slitting, cutting, or shearing from the mother plate that is used to produce one or more pieces of pipe.

3.1.16
defect
Imperfection of a size and/or population density greater than the acceptance criteria specified in this specification.

3.1.17
electric welded pipe
EW pipe
Tubular product having one longitudinal seam produced by low- or high-frequency electric welding.

3.1.18
electric welded seam
EW seam
Longitudinal seam produced by electric welding.

3.1.19
electric welding
EW
Process of forming a seam by electric resistance welding, wherein the edges to be welded are mechanically pressed together and the heat for welding is generated by the resistance to flow of electric current applied by induction or conduction.

3.1.20
flux core arc welding
Welding process that produces melting and coalescence of metals by heating them with an arc between a continuous filler metal electrode and the work-piece, wherein the arc and molten metal are shielded by a flux contained within the tubular electrode.

NOTE In some cases, additional shielding is obtained from an externally supplied gas or gas mixture.

3.1.21
gas metal arc welding
GMAW
Welding process that produces melting and coalescence of metals by heating them with an arc or arcs between a continuous consumable electrode and the work, wherein the arc and molten metal are shielded by an externally supplied gas or gas mixture.

NOTE Contact pressure is not used, and the filler metal is obtained from the electrode.

3.1.22
heat
The metal produced by a single cycle of a batch melting process.

3.1.23
high-frequency welded pipe
HFW pipe
EW pipe produced with a welding current frequency equal to or greater than 70 kHz.

3.1.24
if agreed
Requirement to be as prescribed, or more stringent than is prescribed, if agreed upon by the manufacturer and the purchaser and specified in the purchase order.

NOTE Associated, for example, with items covered by 7.2 c).

3.1.25
imperfection
Discontinuity or irregularity in the product wall or on the product surface that is detectable by inspection methods outlined in this specification.

3.1.26
indication
Evidence obtained by nondestructive inspection.

3.1.27
inspection
Activities, such as measuring, examining, testing, weighing, or gauging one or more characteristics of a product and comparing the results of such activities with the specified requirements in order to determine conformity.

3.1.28
instrument standardization
Adjustment of a nondestructive inspection instrument to an arbitrary reference value.

3.1.29
jointer
Two or three lengths of pipe coupled or welded together by the manufacturer.

3.1.30
ladle refining
A post steelmaking secondary process, performed prior to casting to improve the steel quality, of which some examples may include degassing, desulfurization, and various methods for the removal of nonmetallic inclusions and for inclusion shape control.

3.1.31
lamination
Internal metal separation that creates layers, generally parallel to the pipe surface.

3.1.32
laser welded pipe
LW pipe
Tubular product having one longitudinal seam produced by laser welding.

3.1.33
laser welding
LW
Process of forming a seam by using a laser-beam keyhole welding technique to produce melting and coalescence of the edges to be welded, with or without preheating of the edges, wherein shielding is obtained from an externally supplied gas or gas mixture.

3.1.34
low-frequency electric welded pipe
LFW pipe
EW pipe produced with a welding current frequency less than 70 kHz.

3.1.35
manufacturer
Firm, company, or corporation responsible for making and marking the product in accordance with the requirements of this specification.

NOTE The manufacturer is, as applicable, a pipe mill, processor, maker of couplings or threader.

3.1.36
mother coil
Hot-rolled coil of steel processed from a single reheated slab that is used to produce one or more pieces of pipe.

3.1.37
mother plate
Hot-rolled plate of steel processed from a single reheated slab that is used to produce one or more pieces of pipe.

3.1.38
nondestructive inspection
nondestructive testing
NDT
Inspection of pipe to reveal imperfections, using radiographic, ultrasonic, or other methods specified in this specification that do not involve disturbance, stressing, or breaking of the materials.

3.1.39
normalizing formed
Pipe delivery condition resulting from the forming process in which the final deformation is carried out within a certain temperature range, leading to a material condition equivalent to that obtained after normalizing, such that the specified mechanical properties would still be met in the event of any subsequent normalizing.

3.1.40
normalizing rolled
Pipe delivery condition resulting from the rolling process in which the final deformation is carried out within a certain temperature range, leading to a material condition equivalent to that obtained after normalizing,

such that the specified mechanical properties would still be met in the event of any subsequent normalizing.

3.1.41
pipe body
<SMLS pipe> the entire pipe.

3.1.42
pipe body
<Welded pipe> the entire pipe, excluding the weld(s) and heat-affected zone.

3.1.43
pipe grade
Designation of pipe strength level.

NOTE Chemical composition and/or heat treatment condition of a pipe grade may differ.

3.1.44
pipe mill
Firm, company, or corporation that operates pipe-making facilities.

3.1.45
processor
Firm, company, or corporation that operates facilities capable of heat treating pipe made by a pipe mill.

3.1.46
product analysis
Chemical analysis of the pipe, plate, or coil.

3.1.47
purchaser
Party responsible for both the definition of requirements for a product order and for payment of that order.

3.1.48
quenching and tempering
Heat treatment consisting of quench hardening followed by tempering.

3.1.49
sample
Quantity of material taken from the product to be tested for the purpose of producing one or more test pieces.

3.1.50
SAW pipe
submerged arc welded pipe
Tubular product having one or two longitudinal seams, or one helical seam, produced by the submerged arc welding process.

3.1.51
SAWH pipe
submerged arc helical welded pipe
Tubular product having one helical seam produced by the submerged arc welding process.

3.1.52
SAWL pipe
submerged arc longitudinal welded pipe
Tubular product having one or two longitudinal seams produced by submerged arc welding.

3.1.53
SAW seam
submerged arc welding seam
Longitudinal or helical seam produced by submerged arc welding.

3.1.54
seamless pipe
SMLS pipe
Pipe without a welded seam, produced by a hot forming process, which can be followed by cold sizing or cold finishing to produce the desired shape, dimensions, and properties.

3.1.55
service condition
Condition of use that is specified by the purchaser in the purchase order.

NOTE In this specification, the terms “sour service” and “offshore service” are service conditions.

3.1.56
shielded metal arc welding
SMAW
Welding process that produces melting and coalescence of metals by heating them with an arc between a covered metal electrode and the work, wherein the arc and molten metal are shielded by decomposition of the electrode covering.

NOTE Contact pressure is not used, and the decomposition is obtained from the electrode.

3.1.57
submerged arc welding
SAW
Welding process that produces melting and coalescence of metals by heating them with an arc or arcs between a bare metal consumable electrode or electrodes and the work-piece, wherein the arc and molten metal are shielded by a blanket of granular flux.

NOTE Contact pressure is not used, and part or all of the filler metal is obtained from the electrodes.

3.1.58
tack weld
Intermittent or continuous seam weld used to maintain the alignment of the abutting edges until the final seam weld is produced.

3.1.59
test piece
Part of a sample with specified dimensions, machined or un-machined, brought to a required condition for submission to a given test.

3.1.60
test unit
Prescribed quantity of pipe that is made to the same specified outside diameter and specified wall thickness, from coils/plates produced by the same hot rolling practice (as applicable to welded pipe), by the same pipe-manufacturing process from the same heat and under the same pipe-manufacturing conditions.

3.1.61
thermomechanical forming
Hot forming process for manufacture of pipe, in which the final deformation is carried out in a certain temperature range, leading to a material condition with certain properties that cannot be achieved or repeated by heat treatment alone, and such deformation is followed by cooling, possibly with increased cooling rates, with or without tempering, self-tempering included.

CAUTION—Subsequent heating above 580 °C (1075 °F) typically can lower the strength values.

3.1.62
thermomechanical rolled
Pipe delivery condition resulting from the hot rolling process for coil or plate, in which the final deformation is carried out in a certain temperature range, leading to a material condition with certain properties that cannot be achieved or repeated by heat treatment alone, and such deformation is followed by cooling, possibly with increased cooling rates, with or without tempering, self-tempering included.

CAUTION—Subsequent heating above 580 °C (1075 °F) typically can lower the strength values.

3.1.63
undercut
Groove melted into the parent metal adjacent to the weld toe and left unfilled by the deposited weld metal.

3.1.64
unless otherwise agreed
Requirement that applies, unless an alternative requirement is agreed upon between the manufacturer and the purchaser and specified in the purchase order.

NOTE Associated, for example, with items covered by 7.2 b) and 7.2 c).

3.1.65
welded pipe
CW, COWH, COWL, EW, HFW, LFW, LW, SAWH, or SAWL pipe

3.2 Symbols

a	length of coil/plate end weld
A_f	elongation after fracture, expressed in percent and rounded to the nearest percent
A_{gb}	breadth diameter of guided bend test mandrel/roll, expressed in millimeters (inches)
A_I	internal cross-sectional area of pipe, expressed in square millimeters (square inches)
A_P	cross-sectional area of pipe wall, expressed in square millimeters (square inches)
A_R	cross-sectional area of end-sealing ram, expressed in square millimeters (square inches)
A_{xc}	applicable tensile test piece cross-sectional area, expressed in square millimeters (square inches)
b	specified width of bearing face, expressed in millimeters (inches)
B	distance of the die walls or distance of the supports in the guided-bend test, expressed in millimeters (inches)
C	constant, which is dependent upon the system of units used
CE_{IIW}	carbon equivalent, based on the International Institute of Welding equation

CE_{Pcm}	carbon equivalent, based on the chemical portion of the Ito-Bessyo carbon equivalent equation
d	calculated inside diameter of pipe, expressed in millimeters (inches)
D_a	manufacturer-designated outside diameter after sizing, expressed in millimeters (inches)
D_b	manufacturer-designated outside diameter before sizing, expressed in millimeters (inches)
D	specified outside diameter of pipe, expressed in millimeters (inches)
Δ	tangential dimension from the OD to the intersection of the exposed OD Charpy shoulder and the end of the specimen, expressed in millimeters (inches)
δ	machined depth from the OD to the Charpy surface at mid-specimen length, expressed in millimeters (inches)
f	frequency, expressed in hertz (cycles per second)
K_V	full-size Charpy V-notch absorbed energy, expressed in joules (foot·pounds force)
L	length of pipe, expressed in meters (feet)
N_L	specified minimum length, coupling dimension, expressed in millimeters (inches)
P	hydrostatic test pressure, expressed in megapascals (pounds per square inch)
P_R	internal pressure on end-sealing ram, expressed in megapascals (pounds per square inch)
Q	specified diameter of recess coupling dimension, expressed in millimeters (inches)
r	radius, expressed in millimeters (inches)
r_a	radius of the mandrel for the guided bend test, expressed in millimeters (inches)
r_b	radius of the die for the guided bend test, expressed in millimeters (inches)
r_o	pipe outside radius, expressed in millimeters (inches)
R_m	tensile strength, expressed in megapascals (pounds per square inch)
$R_{p0.2}$	yield strength (0.2 % nonproportional extension), expressed in megapascals (pounds per square inch)
$R_{t0.5}$	yield strength (0.5 % total extension), expressed in megapascals (pounds per square inch)
s_r	sizing ratio
S	hoop stress for the hydrostatic test, expressed in megapascals (pounds per square inch)
t	specified wall thickness of pipe, expressed in millimeters (inches)
t_{min}	minimum permissible wall thickness of pipe, expressed in millimeters (inches)
U	specified minimum tensile strength, expressed in megapascals (pounds per square inch)
U_{EL}	uniform elongation, expressed in percent
V_t	transverse ultrasonic velocity, expressed in meters per second (feet per second)
W	specified outside diameter, coupling dimension, expressed in millimeters (inches)
ε	strain

λ wavelength, expressed in meters (feet)

ρ_l mass per unit length of plain-end pipe, expressed in kilograms per meter (pounds per foot)

σ_h design hoop stress for the pipeline, expressed in megapascals (pounds per square inch)

3.3 Abbreviations

API American Petroleum Institute

AISI American Iron and Steel Institute

COW combination welding process for pipe during manufacturing

COWH combination helical welding process for pipe during manufacturing

COWL combination longitudinal welding process for pipe during manufacturing

CTOD crack tip opening displacement

CVN Charpy V-notch

CW continuous welding process for pipe during manufacturing

DWT drop-weight tear

EDI electronic data interchange

EPRG European Pipeline Research Group

EW electric resistance or electric induction welding process for pipe during manufacturing

GMAW gas metal arc welding

HAZ heat-affected zone

HBW Brinell hardness with tungsten ball

HFW high-frequency electric welding process for pipe during manufacturing

HIC hydrogen-induced cracking

HRC Rockwell hardness, C scale

HV Vickers hardness

IQI image quality indicator

LFW low-frequency electric welding process for pipe during manufacturing

LW laser welding process for pipe during manufacturing

MT magnetic particle testing

NDT nondestructive testing

PSL product specification level

PT penetrant testing

SAW submerged arc welding process for pipe during manufacture

SAWH	submerged arc helical welding process for pipe during manufacture
SAWL	submerged arc longitudinal welding process for pipe during manufacture
SI	International System of Units
SMAW	shielded metal arc welding for pipe during manufacture
SMLS	seamless pipe
SSC	sulfide stress cracking
SWC	stepwise cracking
TFL	through the flowline
USC	United States customary
UT	ultrasonic testing
WPQT/PQR	welding procedure qualification test record
WPS	welding procedure specification

4 Conformity

4.1 Units of Measurement

In this specification, data are expressed in both the International System of Units (SI) and the United States customary (USC) units. For a specific order item, only one system of units shall be used, without combining data expressed in the other system. Data values expressed in SI and USC units shall not be combined on the same inspection document or in the same required pipe marking sequence.

Where product is tested and verified against requirements using one measurement system (USC or SI), and an inspection document is issued, with data reported in the alternate measurement system units, a statement shall appear on the inspection document indicating that the data presented were converted from the measurement system used for the original inspection.

The purchaser shall specify whether data, drawings, and maintenance dimensions of pipe shall be in the SI or USC system of measurements. Use of an SI data sheet indicates that the SI measurements shall be used. Use of a USC data sheet indicates the USC system of measurements shall be used.

4.2 Rounding

Unless otherwise stated in this specification, to determine conformance with the specified requirements, observed or calculated values shall be rounded to the nearest unit in the last right-hand place of figures used in expressing the limiting value, in accordance with ISO 80000-1:2009/Cor 1:2011, Annex B, Rule A.

NOTE For the purposes of this provision, the rounding method of ASTM E29-04 [1] is equivalent to ISO 80000-1: 2009/Cor 1:2011, Annex B, Rule A.

5 Compliance to This Specification

5.1 Quality

A documented quality system shall be applied to assist compliance with the requirements of this specification.

NOTE 1 Documentation of a quality system does not require certification by a third-party certification body; only the creation or adoption of a written quality system is necessary to meet the requirement of this standard. API defers to the expertise of responsible quality management personnel to create or adopt the system that best reflects the need of each company.

NOTE 2 There are many existing quality management systems to which personnel can refer to for guidance in the development of an appropriate quality system, including ISO/TS 29001 [2] and API Q1 [3], which contain provisions specific to the oil and gas industry, or ISO 9001 [4], which contains general requirements for quality management systems that are auditable. This list is not exhaustive and is provided for information only.

A contract can specify that the manufacturer shall be responsible for complying with all of the applicable requirements of this specification, which may include terms for it to be permissible for the purchaser to investigate as necessary in order to be assured of compliance by the manufacturer and to reject any material that does not comply.

5.2 Other Terms and Definitions

For the purposes of this document, the terms and definitions in the following documents, except as given in 3.1, shall apply:

a) ISO 6929 or ASTM A941 for steel products;

b) API 5T1 for imperfection terminology;

c) ISO 404, ISO 10474, or ASTM A370, whichever is applicable, for the types of sampling procedures, inspection, and inspection documents.

5.3 References to Annexes

For additional requirements or information concerning the manufacturing of line pipe, as referenced, see the following for:

— PSL 2 manufacturing procedure qualification, see Annex B (normative);

— treating surface imperfections and defects, see Annex C (normative);

— welding repair procedure, see Annex D (normative);

— nondestructive testing (NDT) for nonsour service, or nonoffshore service, or nonlongitudinal plastic strain capacity, see Annex E (normative);

— PSL 1 coupling requirements, see Annex F (normative);

— PSL 2 ductile fracture propagation resistance, see Annex G (normative);

— PSL 2 pipe for sour service, see Annex H (normative);

— through the flowline (TFL) pipe, see Annex I (normative);

— PSL 2 pipe for offshore service, see Annex J (normative);

— NDT for sour service, offshore service, or longitudinal plastic strain capacity, see Annex K (normative);

— steel designations, see Annex L (informative);

— welded jointers, see Annex M (normative);

— PSL 2 pipe for longitudinal plastic strain capacity, see Annex N (normative);

— Monogram licensee additional information (other than Annex A), see Annex O (informative);

— equations for pipe, guided bend, and Charpy V-notch (CVN) test specimens, see Annex P (informative).

6 Pipe Grades and Steel Grades, and Delivery Condition

6.1 Pipe Grades and Steel Grades

6.1.1 The pipe grade for PSL 1 pipe is identical to the steel grade (designated by a steel name) and shall be as given in Table 1. It consists of an alpha or alphanumeric designation that identifies the strength level of the pipe and is linked to the chemical composition of the steel.

NOTE 1 The designations for Grade A and Grade B do not contain any reference to the specified minimum yield strength; however, the numerical portion of other designations corresponds with the specified minimum yield strength in SI units or with the upward-rounded specified minimum yield strength, expressed in 1000 psi for USC units.

NOTE 2 The suffix "P" indicates that the steel has a specified phosphorus range.

6.1.2 The pipe grade for PSL 2 pipe shall be as given in Table 1 and consists of an alpha or alphanumeric designation that identifies the strength level of the pipe. The steel name (designating a steel grade), linked to the chemical composition of the steel, additionally includes a suffix that consists of a single letter (R, N, Q, or M) that identifies the delivery condition (see Table 3).

NOTE 1 The designation for Grade B does not contain any reference to the specified minimum yield strength; however, the numerical portion of other designations corresponds with the specified minimum yield strength in SI units or USC units.

NOTE 2 For sour service, see H.4.1.1.

NOTE 3 For offshore service, see J.4.1.1.

NOTE 4 For pipe requiring longitudinal plastic strain capacity, see N.4.1.1.

6.1.3 Other steel grade designations (steel numbers) that are used in addition to the steel name in Europe are given for guidance in Table L.1.

6.2 Delivery Condition

6.2.1 For each order item, the delivery condition for PSL 1 pipe shall be at the option of the manufacturer unless a specific delivery condition is specified in the purchase order. Delivery conditions for PSL 1 and PSL 2 pipes are given in Table 1 with additional information for PSL 2 pipe in Table 3.

6.2.2 For PSL 2 pipe, the delivery condition shall be in accordance with the purchase order as specified in the steel name.

Table 1—Pipe Grade and Steel Grades, and Acceptable Delivery Conditions

PSL	Delivery Condition	Pipe Grade/Steel Grade [a,b]
PSL 1	As-rolled, normalizing rolled, normalized, or normalizing formed	L175 or A25
		L175P or A25P
		L210 or A
	As-rolled, normalizing rolled, thermomechanical rolled, thermomechanical formed, normalizing formed, normalized, normalized and tempered; or, if agreed, quenched and tempered for SMLS pipe only	L245 or B
	As-rolled, normalizing rolled, thermomechanical rolled, thermomechanical formed, normalizing formed, normalized, normalized and tempered or quenched and tempered	L290 or X42
		L320 or X46
		L360 or X52
		L390 or X56
		L415 or X60
		L450 or X65
		L485 or X70
PSL 2	As-rolled	L245R or BR
		L290R or X42R
	Normalizing rolled, normalizing formed, normalized, or normalized and tempered	L245N or BN
		L290N or X42N
		L320N or X46N
		L360N or X52N
		L390N or X56N
		L415N or X60N
	Quenched and tempered	L245Q or BQ
		L290Q or X42Q
		L320Q or X46Q
		L360Q or X52Q
		L390Q or X56Q
		L415Q or X60Q
		L450Q or X65Q
		L485Q or X70Q
		L555Q or X80Q
		L625Q or X90Q [c]
		L690Q or X100Q [c]
PSL 2	Thermomechanical rolled or thermomechanical formed	L245M or BM
		L290M or X42M
		L320M or X46M
		L360M or X52M
		L390M or X56M
		L415M or X60M
		L450M or X65M
		L485M or X70M
		L555M or X80M
	Thermomechanical rolled	L625M or X90M
		L690M or X100M
		L830M or X120M

[a] For intermediate grades, the steel grade shall be in one of the following formats: (1) the letter L followed by the specified minimum yield strength in MPa and, for PSL 2 pipe, the letter describing the delivery condition (R, N, Q, or M) consistent with the above formats; (2) the letter X followed by a two- or three-digit number equal to the specified minimum yield strength in 1000 psi rounded down to the nearest integer and, for PSL 2 pipe, the letter describing the delivery condition (R, N, Q, or M) consistent with the above formats.

[b] The suffix (R, N, Q, or M) for PSL 2 grades belongs to the steel grade.

[c] Seamless only.

7 Information to Be Supplied by the Purchaser

7.1 General Information

The purchase order shall include the following information:

a) quantity (e.g. total mass or total length of pipe);

b) PSL (1 or 2);

c) type of pipe (see Table 2);

d) reference to API 5L;

e) steel grade (see 6.1, H.4.1.1, or J.4.1.1, whichever is applicable);

f) outside diameter and wall thickness (see 9.11.1.2);

g) length and type of length (random or approximate) (see 9.11.1.3, 9.11.3.3, and Table 12);

h) confirmation of applicability of individual annexes.

7.2 Additional Information

The purchase order shall indicate which of the following provisions apply for the specific order item:

a) Items that are subject to mandatory agreement, if applicable:

   1) pipe designation for intermediate grades [see Table 1, footnote a)];

   2) chemical composition for intermediate grades (see 9.2.1 and 9.2.2);

   3) chemical composition for pipe with t > 25.0 mm (0.984 in.) (see 9.2.3);

   4) carbon equivalent limits for PSL 2 pipe in Grade L415N or X60N (see Table 5);

   5) carbon equivalent limits for PSL 2 pipe in Grade L555Q or X80Q, L625Q or X90Q, and L690Q or X100Q (see Table 5);

   6) carbon equivalent limits for PSL 2 SMLS pipe with t > 20.0 mm (0.787 in.) [see Table 5, footnote a)];

   7) diameter and out-of-roundness tolerances for pipe with D > 1422 mm (56.000 in.) (see Table 10);

   8) diameter and out-of-roundness tolerances for the ends of SMLS pipe with t > 25.0 mm (0.984 in.) [see Table 10, footnote b)];

   9) standard applicable to jointer welds (see M.1.4).

b) Items that apply as prescribed, unless otherwise agreed:

   1) range of sizing ratio for cold-expanded pipe (see 8.9.2);

   2) equation for sizing ratio (see 8.9.3);

3) chemical composition limits for PSL 1 pipe [see Table 4, footnotes c), e), and f)];

4) chemical composition limits for PSL 2 pipe [see Table 5, footnotes c), e), f), g), h), i), k), and l)];

5) yield/tensile ratio for grades L625Q or X90Q, L690 or X100, and L830 or X120 [see Table 7, footnotes g) and h) or Table J.2, footnotes h) and i)];

6) estimation and reporting of Charpy shear area (see 9.8.2.3);

7) tolerances for random length pipe [see 9.11.3.3 a)];

8) type of thread compound (see 9.12.2.4);

9) type of end face (see 9.12.5.1 or 9.12.5.2);

10) international standard applicable to Charpy testing (see 10.2.3.3, 10.2.4.3, D.2.3.4.2, and D.2.3.4.3);

11) product analysis method (see 10.2.4.1);

12) alternate method for diameter measurement for $D \geq 508$ mm (20.000 in.) (see 10.2.8.1);

13) jointer welding type (see M.1.2);

14) offset of longitudinal pipe weld seams at jointer welds (see M.3.5);

15) repairs in cold-expanded pipe (see C.4.2);

16) alternate image quality indicator (IQI) type (see E.4.3.1).

c) Items that apply, if agreed:

1) delivery condition (see 6.2 and Table 1);

2) supply of quenched and tempered PSL 1 Grade L245 or B SMLS pipe (see Table 1);

3) supply of intermediate grades [see Table 2, footnote a)];

4) supply of double-seam SAWL pipe [see Table 2, footnote c)];

5) alternative to specified seam heat treatment for PSL 1 pipe (see 8.8.1);

6) supply of SAWH pipe with coil/plate end welds at the pipe ends (see 8.10.3);

7) supply of jointers (see 8.11);

8) CVN impact test temperature lower than 0 °C (32 °F) (see 9.8.2.1, 9.8.2.2, 9.8.3, and D.2.3.4.4);

9) CVN impact test of the pipe body of PSL 2 welded pipe with $D < 508$ mm (20.000 in.) for shear fracture area (see 9.8.2.2 and Table 18);

10) CVN impact test of the longitudinal seam weld of PSL 2 HFW pipe (see 9.8.3 and Table 18),

11) drop-weight tear (DWT) test of the pipe body of PSL 2 welded pipe with $D \geq 508$ mm (20.000 in.) (see 9.9.1 and Table 18);

12) DWT test temperature lower than 0 °C (32 °F) (see 9.9.1);

13) fraction jointers comprising two or three pieces for 12 m (40 ft) nominal or 24 m (80 ft) nominal, respectively [see 9.11.3.3 c), d), and e)];

14) power-tight make-up of couplings (see 9.12.2.3 and 10.2.6.1);

15) special bevel configuration (see 9.12.5.3);

16) removal of outside weld bead at pipe ends of SAW or COW pipe [see 9.13.2.2 e)];

17) weldability data or tests for PSL 2 pipe (see 9.15);

18) type of inspection document for PSL 1 pipe (see 10.1.2.1);

19) manufacturing information for PSL 1 pipe (see 10.1.2.2);

20) alternative type of inspection document for PSL 2 pipe (see 10.1.3.1);

21) use of transverse test pieces for tensile tests of SMLS pipe, not cold-expanded [see Table 20, footnote c)];

22) use of the ring expansion test for transverse yield strength determinations [see 10.2.3.2, Table 19 footnote c), and Table 20 footnote d)];

23) use of an alternative to macrographic examination (see 10.2.5.2);

24) hardness test during production of EW and LW pipe (see 10.2.5.3);

25) specific condition to be used for hydrostatic tests for threaded and coupled pipe (see 10.2.6.1);

26) alternate hydrotest pressure (see Table 26);

27) use of minimum permissible wall thickness to determine hydrostatic test pressure (see 10.2.6.7);

28) specific method to be used for determining pipe diameter (see 10.2.8.1);

29) use of inside diameter measurements to determine diameter and out-of-roundness for expanded pipe with $D \geq 219.1$ mm (8.625 in.) and for nonexpanded pipe [see 10.2.8.3 and Table 10, footnote c)];

30) specific method to be used for determining other pipe dimensions (see 10.2.8.7);

31) paint-stenciled markings for couplings (see 11.1.2);

32) additional markings specified by the purchaser (see 11.1.4);

33) dual unit marking [see 11.2.1 e)];

34) specific surface or location for pipe markings [see 11.2.3 b) and 11.2.7 b)];

35) die-stamping or vibro-etching of pipe (see 11.2.4);

36) alternative location for marking the pipe (see 11.2.5);

37) alternative format for pipe length marking locations (see 11.2.7 a);

38) color identification for pipe (see 11.2.8);

39) multiple grade marking (see 11.4.1);

40) temporary external coating (see 12.1.2);

41) special coating (see 12.1.3);

42) lining (see 12.1.4);

43) manufacturing procedure qualification for PSL 2 pipe, in which case Annex B shall apply (see B.1.1);

44) radiographic inspection of SAW seam or coil/plate end weld (see Table E.1);

45) nondestructive inspection of PSL 1 SMLS pipe (see E.3.1.2);

46) NDT of EW seam welds after hydrotest [see E.3.1.3 b)];

47) ultrasonic inspection of welded pipe for laminar imperfections at pipe ends (see E.3.2.3);

48) ultrasonic inspection of SMLS pipe for laminar imperfections at pipe ends (see E.3.3.2);

49) radiographic inspection in accordance with E.4;

50) use of both holes and notches in ultrasonic reference standard (see Table E.7);

51) alternative re-inspection technique for COW seams (see E.5.5.5);

52) ultrasonic inspection for laminar imperfections in the pipe body of EW, SAW, or COW pipe (see E.8);

53) ultrasonic inspection for laminar imperfections along the coil/plate edges or the weld seam of EW, SAW, or COW pipe (see E.9);

54) supply of welded couplings on pipe with $D \geq 355.6$ mm (14.000 in.) (see F.1.4);

55) application of Annex G to PSL 2 pipe where purchaser shall specify the toughness test temperature, the minimum energy for each test, and the minimum average energy value required for the order (see G.2);

56) PSL 2 pipe for sour service, in which case, Annex H shall apply (see H.2);

57) TFL pipe, in which case Annex I shall apply (see I.2);

58) pipe for offshore service, in which case Annex J shall apply (see J.2);

59) pipe for longitudinal plastic strain capacity, in which case Annex N shall apply when specified (see N.2);

60) other additional or more stringent requirements;

61) application of the API Monogram, in which case the requirements of Annex A and Annex O apply.

8 Manufacturing

8.1 Process of Manufacture

Pipe furnished to this specification shall be manufactured in accordance with the applicable requirements and limitations given in Tables 2 and 3.

Table 2—Acceptable Process of Manufacture and PSLs

Type of Pipe or Pipe End	PSL 1 Pipe Grade [a]					PSL 2 Pipe Grade [a]		
	L175 or A25 [b]	L175P or A25P [b]	L210 or A	L245 or B	L290 or X42 to L485 or X70	L245 or B to L555 or X80	> L555 or X80 to L690 or X100	> L690 or X100 to L830 or X120
Type of Pipe								
SMLS	X	X	X	X	X	X	X	—
CW	X	X	—	—	—	—	—	—
LFW	X	—	X	X	X	—	—	—
HFW	X	—	X	X	X	X	—	—
LW	—	—	—	—	X	—	—	—
SAWL [c]	—	—	X	X	X	X	X	X
SAWH [d]	—	—	X	X	X	X	X	X
COWL [c]	—	—	X	X	X	X	—	—
COWH [d]	—	—	X	X	X	X	—	—
Type of Pipe End								
Belled end [e]	X	—	X	X	X	—	—	—
Plain end	X	—	X	X	X	X	X	X
Plain end for special coupling	X	—	X	X	—	—	—	—
Threaded end [f]	X	X	X	X	—	—	—	—

[a] Intermediate grades are available if agreed, but limited to grades higher than Grade L290 or X42.

[b] Grades L175, L175P, A25, and A25P are limited to pipe with D ≤141.3 mm (5.563 in.).

[c] Double-seam pipe is available if agreed, but limited to pipe with D ≥ 914 mm (36.000 in.).

[d] Helical seam pipe is limited to pipe with D ≥ 114.3 mm (4.500 in.).

[e] Belled-end pipe is limited to pipe with D ≤ 219.1 mm (8.625 in.) and t ≤ 3.6 mm (0.141 in.).

[f] Threaded-end pipe is limited to SMLS and longitudinal seam welded pipe with D ≤ 508 mm (20.000 in.).

Table 3—Acceptable Manufacturing Routes for PSL 2 Pipe

Type of Pipe	Starting Material	Pipe Forming	Pipe Heat Treatment	Delivery Condition
SMLS	Ingot, bloom, or billet	As-rolled	—	R
		Normalizing forming	—	N
		Hot forming	Normalizing	N
			Quenching and tempering	Q
		Hot forming and cold finishing	Normalizing	N
			Quenching and tempering	Q
HFW	Normalizing-rolled coil	Cold forming	Heat treating [a] of weld area only	N
	Thermomechanical-rolled coil	Cold forming	Heat treating [a] of weld area only	M
			Heat treating [a] of weld area and stress relieving of entire pipe	M
	As-rolled or thermomechanical-rolled coil	Cold forming	Normalizing	N
			Quenching and tempering	Q
		Cold forming followed by hot reducing under controlled temperature resulting in a normalized condition	—	N
		Cold forming followed by thermomechanical forming of pipe	—	M
SAW or COW pipe	Normalized or normalizing-rolled coil or plate	Cold forming	—	N
	As-rolled, thermomechanical-rolled, normalizing-rolled, or normalized	Cold forming	Normalizing	N
	Thermomechanical-rolled coil or plate	Cold forming	—	M
	Quenched and tempered plate	Cold forming	—	Q
	As-rolled, thermomechanical-rolled, normalizing-rolled, or normalized coil or plate	Cold forming	Quenching and tempering	Q
	As-rolled, thermomechanical-rolled, normalizing-rolled, or normalized coil or plate	Normalizing forming	—	N

[a] See 8.8 for applicable heat treatments.

8.2 Processes Requiring Validation

Final operations performed during pipe manufacturing that affect attribute compliance as required in this specification (except chemical composition and dimensions) shall have their processes validated.

Those processes requiring validation are the following:

a) for seamless, as-rolled pipe: final reheating practice and hot sizing or stretch reducing; if applicable, upsetting, cold finishing;

b) for seamless, heat-treated pipe: heat treatment;

c) for electric welded, as-rolled pipe: sizing and seam welding; if applicable, seam heat treatment and upsetting;

d) for electric welded, heat-treated pipe: seam welding and full-body heat treatment;

e) for SAW and COW pipe, nonexpanded: pipe forming, seam welding, repair welding; if applicable, heat treatment;

f) for SAW and COW pipe, expanded: pipe forming, seam welding, repair welding, expansion.

8.3 Starting Material

8.3.1 The supplying steel and rolling mill(s) shall have a documented quality management system.

NOTE 1 Documentation of a quality system does not require certification by a third-party certification body. Only the creation or adoption of a written quality system is necessary to meet the requirement of this specification. API defers to the expertise of responsible quality management personnel to create or adopt the system that best reflects the need of each company.

NOTE 2 There are many existing quality management systems to which personnel can refer for guidance in the development of an appropriate quality system, including ISO/TS 29001 and API Q1, which contain provisions specific to the oil and gas industry, or ISO 9001, which contains general requirements for quality management systems that are auditable. This list is not exhaustive and is provided for information only.

8.3.2 The ingots, blooms, billets, coils, or plates used as starting material for the manufacture of pipe shall be made from steel made by:

a) basic oxygen process,

b) electric furnace process, or

c) open hearth process only in combination with a ladle refining process.

8.3.3 For PSL 2 pipe, the steel shall be killed and made according to fine grain practice.

8.3.4 The coil or plate used for the manufacture of PSL 2 pipe shall not contain any repair welds.

8.3.5 The width of the coil or plate used for the manufacture of helical seam pipe shall not be less than 0.8 times or more than 3.0 times the specified outside diameter of the pipe.

8.3.6 Any lubricant that contaminates the weld bevel or the surrounding areas shall be removed before making the longitudinal seam welds of SAWL or COWL pipe or the helical seam welds of SAWH or COWH pipe.

8.3.7 For welded pipe with delivery condition M, critical variables of the coil/plate rolling practice (e.g. reheating, rolling and cooling temperatures, times, and tolerances) shall be defined and controlled to ensure that the mechanical properties throughout the pipe are suitably uniform considering:

a) coil/plate characteristics and variability,

b) sensitivity of properties to rolling practice,

c) appropriate coil/plate cropping distances, and

d) tensile property changes inherent in pipe forming.

The permissible ranges of critical variables for coil/plate rolling practice shall be documented.

8.3.8 For welded pipe with delivery condition M, the ability of the coil/plate rolling practice to achieve planned results consistent with 8.3.7 shall be verified as follows.

a) Representative coil/plate and pipe manufacturing trials or historical data of coil/plate and/or pipe properties and processing conditions that demonstrate, within the ranges permitted by documented limits of the rolling practice, the consistent achievement of required pipe properties.

b) For grades higher than L360M or X52M, the pipe manufacturer shall conduct or shall have previously conducted an on-site technical audit of the coil/plate mill and periodic on-site or remote confirmation that the coil/plate rolling practice continues to achieve the planned results. Coil/plate rolling practice validation criteria shall be verified as part of the audit.

8.3.9 Hot rolling practice process deviations from the manufacturer's documented limits shall be qualified through documented practices either in the hot rolled material by mechanical testing to defined limits and/or in the pipe form by designating that material as a new test unit.

8.4 Tack Welds

8.4.1 Tack welds shall be made by:

a) semi-automatic submerged arc welding,

b) electric welding,

c) gas metal arc welding (GMAW),

d) flux-cored arc welding,

e) shielded metal arc welding using a low hydrogen electrode, or

f) laser welding.

8.4.2 Tack welds shall be:

a) melted and coalesced into the final weld seam,

b) removed by machining, or

c) treated in accordance with C.2.

8.5 Weld Seams in COW Pipe

For the production of weld seams in COW pipe, the first pass shall be continuous and made by gas metal arc welding followed by submerged arc welding, with at least one submerged arc welding pass made on the inside of the pipe and at least one submerged arc welding pass made on the outside of the pipe, wherein the gas metal arc weld bead is not completely removed by the submerged arc welding passes.

8.6 Weld Seams in SAW Pipe

For the production of weld seams in SAW pipe, at least one submerged arc welding pass shall be made on the inside of the pipe and at least one submerged arc welding pass shall be made on the outside of the pipe.

8.7 Weld Seams in Double-seam Pipe

The seams of double-seam pipe shall be approximately 180° apart.

8.8 Treatment of Weld Seams in EW and LW Pipe

8.8.1 PSL 1 EW Pipe

For grades higher than Grade L290 or X42, the weld seam and the heat-affected zone (HAZ) shall be heat treated so as to simulate a normalizing heat treatment, except that, if agreed, alternative heat treatments may be substituted. If such substitutions are made, the manufacturer shall demonstrate the effectiveness of the method selected using an agreed procedure. Such a procedure may include, but is not necessarily limited to, hardness testing, microstructural evaluation, or mechanical testing.

For grades equal to or lower than Grade L290 or X42, the weld seam shall be heat treated so as to simulate a normalizing heat treatment, or the pipe shall be processed in such a manner that no untempered martensite remains.

8.8.2 LW Pipe and PSL 2 HFW Pipe

For each grade not subjected to quench and temper processing, the weld seam and the entire HAZ shall be heat treated so as to simulate a normalizing heat treatment.

8.9 Cold Sizing and Cold Expansion

8.9.1 Except as allowed by 8.9.2, the sizing ratio for cold-sized pipe shall not be more than 0.015, unless:

a) the pipe is subsequently normalized or quenched and tempered, or

b) the entire part of the pipe that is cold sized is subsequently stress relieved.

8.9.2 Unless otherwise agreed, the sizing ratio for cold-expanded pipe shall not be less than 0.003 or more than 0.015.

8.9.3 Unless otherwise agreed, the sizing ratio, s_r, shall be derived using Equation (1):

$$s_r = \frac{\left|D_a - D_b\right|}{D_b} \tag{1}$$

where

D_a is the manufacturer-designated outside diameter after sizing, expressed in millimeters (inches);

D_b is the manufacturer-designated outside diameter before sizing, expressed in millimeters (inches);

$|D_a - D_b|$ is the absolute value of the outside diameter difference, expressed in millimeters (inches).

8.10 Coil/Plate End Welds

8.10.1 Coil/plate end welds shall not be present in finished longitudinal seam pipe.

8.10.2 For finished helical seam pipe, junctions of coil/plate end welds, and helical seam welds shall be at least 300 mm (12.0 in.) from the pipe ends.

8.10.3 If agreed, coil/plate end welds in helical seam pipe may be present at the pipe ends, provided that there is a circumferential separation of at least 150 mm (6.0 in.) between the coil/plate end weld and the helical seam at the applicable pipe ends.

8.10.4 Coil/plate end welds in finished helical seam pipe shall have been:

a) made by submerged arc welding or a combination of submerged-arc welding and GMAW;

b) inspected to the same acceptance criteria as specified for the helical seam weld.

8.11 Jointers

8.11.1 Jointers may be furnished if agreed.

8.11.2 Welded jointers shall be made in accordance with the requirements of Annex M.

8.11.3 No pipe used in making a jointer shall be less than 1.5 m (5.0 ft) long.

8.11.4 Portions of pipe used in the making of jointers shall have passed inspection, including hydrostatic testing. Alternatively the completed jointer may be hydrostatically tested.

8.12 Heat Treatment

Heat treatments shall be performed in accordance with documented procedures.

8.13 Traceability

8.13.1 For PSL 1 pipe, the manufacturer shall establish and follow documented procedures for maintaining:

a) the heat identity until each related chemical tests is performed and conformance with the specified requirements is shown;

b) the test-unit identity until each related mechanical tests is performed and conformance with the specified requirements is shown.

8.13.2 For PSL 2 pipe, the manufacturer shall establish and follow documented procedures for maintaining the heat identity and the test-unit identity for such pipe. Such procedures shall provide means for tracing any length of pipe to the proper test unit and the related chemical and mechanical test results.

9 Acceptance Criteria

9.1 General

9.1.1 The general technical delivery requirements shall be in accordance with ISO 404.

9.1.2 Pipe manufactured as Grade L415 or X60 or higher shall not be substituted for pipe ordered as Grade L360 or X52 or a lower grade, without the purchaser's approval.

9.2 Chemical Composition

9.2.1 For PSL 1 pipe with $t \leq 25.0$ mm (0.984 in.), the chemical composition for standard grades shall be as given in Table 4, and the chemical composition for intermediate grades shall be as agreed, but consistent with those given in Table 4.

NOTE Grade L175P or A25P is re-phosphorized and, therefore, has better threading properties than Grade L175 or A25; however, it can be more difficult to bend.

9.2.2 For PSL 2 pipe with $t \leq 25.0$ mm (0.984 in.), the chemical composition for standard grades shall be as given in Table 5, and the chemical composition for intermediate grades shall be as agreed, but consistent with those given in Table 5.

9.2.3 For PSL 1 or PSL 2 pipe with $t > 25.0$ mm (0.984 in.), the chemical composition shall be as agreed, with the requirements of Tables 4 and 5 being amended as appropriate.

9.2.4 For PSL 2 pipe with a product analysis carbon mass fraction equal to or less than 0.12 %, the carbon equivalent, CE_{Pcm}, shall be determined using Equation (2):

$$CE_{Pcm} = C + \frac{Si}{30} + \frac{Mn}{20} + \frac{Cu}{20} + \frac{Ni}{60} + \frac{Cr}{20} + \frac{Mo}{15} + \frac{V}{10} + 5B \quad (2)$$

where the symbols for the chemical elements represent the mass fraction in percent (see Table 5).

If the heat analysis for boron is less than 0.0005 %, then it is not necessary for the product analysis to include boron, and the boron content may be considered to be zero for the CE_{Pcm} calculation.

9.2.5 For PSL 2 pipe with a product analysis carbon mass fraction greater than 0.12 %, the carbon equivalent, CE_{IIW}, shall be determined using Equation (3):

$$CE_{IIW} = C + \frac{Mn}{6} + \frac{(Cr + Mo + V)}{5} + \frac{(Ni + Cu)}{15} \quad (3)$$

where the symbols for the chemical elements represent the mass fraction in percent (see Table 5).

Table 4—Chemical Composition for PSL 1 Pipe with $t \leq 25.0$ mm (0.984 in.)

Steel Grade (Steel Name)	Mass Fraction, Based on Heat and Product Analyses [a,g] %							
	C	Mn	P		S	V	Nb	Ti
	max [b]	max [b]	min	max	max	max	max	max
Seamless Pipe								
L175 or A25	0.21	0.60	—	0.030	0.030	—	—	—
L175P or A25P	0.21	0.60	0.045	0.080	0.030	—	—	—
L210 or A	0.22	0.90	—	0.030	0.030	—	—	—
L245 or B	0.28	1.20	—	0.030	0.030	c,d	c,d	d
L290 or X42	0.28	1.30	—	0.030	0.030	d	d	d
L320 or X46	0.28	1.40	—	0.030	0.030	d	d	d
L360 or X52	0.28	1.40	—	0.030	0.030	d	d	d
L390 or X56	0.28	1.40	—	0.030	0.030	d	d	d
L415 or X60	0.28 [e]	1.40 [e]	—	0.030	0.030	f	f	f
L450 or X65	0.28 [e]	1.40 [e]	—	0.030	0.030	f	f	f
L485 or X70	0.28 [e]	1.40 [e]	—	0.030	0.030	f	f	f
Welded Pipe								
L175 or A25	0.21	0.60	—	0.030	0.030	—	—	—
L175P or A25P	0.21	0.60	0.045	0.080	0.030	—	—	—
L210 or A	0.22	0.90	—	0.030	0.030	—	—	—
L245 or B	0.26	1.20	—	0.030	0.030	c,d	c,d	d
L290 or X42	0.26	1.30	—	0.030	0.030	d	d	d
L320 or X46	0.26	1.40	—	0.030	0.030	d	d	d
L360 or X52	0.26	1.40	—	0.030	0.030	d	d	d
L390 or X56	0.26	1.40	—	0.030	0.030	d	d	d
L415 or X60	0.26 [e]	1.40 [e]	—	0.030	0.030	f	f	f
L450 or X65	0.26 [e]	1.45 [e]	—	0.030	0.030	f	f	f
L485 or X70	0.26 [e]	1.65 [e]	—	0.030	0.030	f	f	f

[a] Cu ≤ 0.50 %; Ni ≤ 0.50 %; Cr ≤ 0.50 % and Mo ≤ 0.15 %.

[b] For each reduction of 0.01 % below the specified maximum concentration for carbon, an increase of 0.05 % above the specified maximum concentration for Mn is permissible, up to a maximum of 1.65 % for grades ≥ L245 or B, but ≤ L360 or X52; up to a maximum of 1.75 % for grades > L360 or X52, but < L485 or X70; and up to a maximum of 2.00 % for Grade L485 or X70.

[c] Unless otherwise agreed, Nb + V ≤ 0.06 %.

[d] Nb + V + Ti ≤ 0.15 %.

[e] Unless otherwise agreed.

[f] Unless otherwise agreed, Nb + V + Ti ≤ 0.15 %.

[g] No deliberate addition of B is permitted and the residual B ≤ 0.001 %.

Table 5—Chemical Composition for PSL 2 Pipe with $t \leq 25.0$ mm (0.984 in.)

Steel Grade (Steel Name)	Mass Fraction, Based on Heat and Product Analyses % max									Carbon Equivalent [a] % max	
	C [b]	Si	Mn [b]	P	S	V	Nb	Ti	Other	CE_{IIW}	CE_{Pcm}
Seamless and Welded Pipe											
L245R or BR	0.24	0.40	1.20	0.025	0.015	[c]	[c]	0.04	[e,l]	0.43	0.25
L290R or X42R	0.24	0.40	1.20	0.025	0.015	0.06	0.05	0.04	[e,l]	0.43	0.25
L245N or BN	0.24	0.40	1.20	0.025	0.015	[c]	[c]	0.04	[e,l]	0.43	0.25
L290N or X42N	0.24	0.40	1.20	0.025	0.015	0.06	0.05	0.04	[e,l]	0.43	0.25
L320N or X46N	0.24	0.40	1.40	0.025	0.015	0.07	0.05	0.04	[d,e,l]	0.43	0.25
L360N or X52N	0.24	0.45	1.40	0.025	0.015	0.10	0.05	0.04	[d,e,l]	0.43	0.25
L390N or X56N	0.24	0.45	1.40	0.025	0.015	0.10 [f]	0.05	0.04	[d,e,l]	0.43	0.25
L415N or X60N	0.24 [f]	0.45 [f]	1.40 [f]	0.025	0.015	0.10 [f]	0.05 [f]	0.04 [f]	[g,h,l]	As agreed	
L245Q or BQ	0.18	0.45	1.40	0.025	0.015	0.05	0.05	0.04	[e,l]	0.43	0.25
L290Q or X42Q	0.18	0.45	1.40	0.025	0.015	0.05	0.05	0.04	[e,l]	0.43	0.25
L320Q or X46Q	0.18	0.45	1.40	0.025	0.015	0.05	0.05	0.04	[e,l]	0.43	0.25
L360Q or X52Q	0.18	0.45	1.50	0.025	0.015	0.05	0.05	0.04	[e,l]	0.43	0.25
L390Q or X56Q	0.18	0.45	1.50	0.025	0.015	0.07	0.05	0.04	[d,e,l]	0.43	0.25
L415Q or X60Q	0.18 [f]	0.45 [f]	1.70 [f]	0.025	0.015	[g]	[g]	[g]	[h,l]	0.43	0.25
L450Q or X65Q	0.18 [f]	0.45 [f]	1.70 [f]	0.025	0.015	[g]	[g]	[g]	[h,l]	0.43	0.25
L485Q or X70Q	0.18 [f]	0.45 [f]	1.80 [f]	0.025	0.015	[g]	[g]	[g]	[h,l]	0.43	0.25
L555Q or X80Q	0.18 [f]	0.45 [f]	1.90 [f]	0.025	0.015	[g]	[g]	[g]	[i,j]	As agreed	
L625Q or X90Q	0.16 [f]	0.45 [f]	1.90	0.020	0.010	[g]	[g]	[g]	[j,k]	As agreed	
L690Q or X100Q	0.16 [f]	0.45 [f]	1.90	0.020	0.010	[g]	[g]	[g]	[j,k]	As agreed	
Welded Pipe											
L245M or BM	0.22	0.45	1.20	0.025	0.015	0.05	0.05	0.04	[e,l]	0.43	0.25
L290M or X42M	0.22	0.45	1.30	0.025	0.015	0.05	0.05	0.04	[e,l]	0.43	0.25
L320M or X46M	0.22	0.45	1.30	0.025	0.015	0.05	0.05	0.04	[e,l]	0.43	0.25
L360M or X52M	0.22	0.45	1.40	0.025	0.015	[d]	[d]	[d]	[e,l]	0.43	0.25
L390M or X56M	0.22	0.45	1.40	0.025	0.015	[d]	[d]	[d]	[e,l]	0.43	0.25
L415M or X60M	0.12 [f]	0.45 [f]	1.60 [f]	0.025	0.015	[g]	[g]	[g]	[h,l]	0.43	0.25
L450M or X65M	0.12 [f]	0.45 [f]	1.60 [f]	0.025	0.015	[g]	[g]	[g]	[h,l]	0.43	0.25
L485M or X70M	0.12 [f]	0.45 [f]	1.70 [f]	0.025	0.015	[g]	[g]	[g]	[h,l]	0.43	0.25
L555M or X80M	0.12 [f]	0.45 [f]	1.85 [f]	0.025	0.015	[g]	[g]	[g]	[i,l]	0.43 [f]	0.25
L625M or X90M	0.10	0.55 [f]	2.10 [f]	0.020	0.010	[g]	[g]	[g]	[i,l]	—	0.25
L690M or X100M	0.10	0.55 [f]	2.10 [f]	0.020	0.010	[g]	[g]	[g]	[i,j]		0.25
L830M or X120M	0.10	0.55 [f]	2.10 [f]	0.020	0.010	[g]	[g]	[g]	[i,j]		0.25

[a] Based on product analysis, for seamless pipe with $t > 20.0$ mm (0.787 in.), the CE limits shall be as agreed; the CE_{IIW} limits apply if C > 0.12 % and the CE_{Pcm} limits apply if C ≤ 0.12 %.

[b] For each reduction of 0.01 % below the specified maximum for C, an increase of 0.05 % above the specified maximum for Mn is permissible, up to a maximum of 1.65 % for grades ≥ L245 or B, but ≤ L360 or X52; up to a maximum of 1.75 % for grades > L360 or X52, but < L485 or X70; up to a maximum of 2.00 % for grades ≥ L485 or X70, but ≤ L555 or X80; and up to a maximum of 2.20 % for grades > L555 or X80.

[c] Unless otherwise agreed, Nb + V ≤ 0.06 %.

[d] Nb + V + Ti ≤ 0.15 %.

[e] Unless otherwise agreed, Cu ≤ 0.50 %; Ni ≤ 0.30 %; Cr ≤ 0.30 % and Mo ≤ 0.15 %.

[f] Unless otherwise agreed.

[g] Unless otherwise agreed, Nb + V + Ti ≤ 0.15 %.

[h] Unless otherwise agreed, Cu ≤ 0.50 %; Ni ≤ 0.50 %; Cr ≤ 0.50 % and Mo ≤ 0.50 %.

[i] Unless otherwise agreed, Cu ≤ 0.50 %; Ni ≤ 1.00 %; Cr ≤ 0.50 % and Mo ≤ 0.50 %.

[j] B ≤ 0.004 %.

[k] Unless otherwise agreed, Cu ≤ 0.50 %; Ni ≤ 1.00 %; Cr ≤ 0.55 % and Mo ≤ 0.80 %.

[l] For PSL 2 pipe grades except those grades to which footnote j) already applies, the following applies: unless otherwise agreed no intentional addition of B is permitted and residual B ≤ 0.001 %.

9.3 Tensile Properties

9.3.1 For PSL 1 pipe, the tensile properties shall be as given in Table 6.

9.3.2 For PSL 2 pipe, the tensile properties shall be as given in Table 7.

Table 6—Requirements for the Results of Tensile Tests for PSL 1 Pipe

Pipe Grade	Pipe Body of Seamless and Welded Pipe			Weld Seam of EW, LW, SAW, and COW Pipe
	Yield Strength [a] $R_{t0.5}$ MPa (psi) min	Tensile Strength [a] R_m MPa (psi) min	Elongation (on 50 mm or 2 in.) A_f % min	Tensile Strength [b] R_m MPa (psi) min
L175 or A25	175 (25,400)	310 (45,000)	[c]	310 (45,000)
L175P or A25P	175 (25,400)	310 (45,000)	[c]	310 (45,000)
L210 or A	210 (30,500)	335 (48,600)	[c]	335 (48,600)
L245 or B	245 (35,500)	415 (60,200)	[c]	415 (60,200)
L290 or X42	290 (42,100)	415 (60,200)	[c]	415 (60,200)
L320 or X46	320 (46,400)	435 (63,100)	[c]	435 (63,100)
L360 or X52	360 (52,200)	460 (66,700)	[c]	460 (66,700)
L390 or X56	390 (56,600)	490 (71,100)	[c]	490 (71,100)
L415 or X60	415 (60,200)	520 (75,400)	[c]	520 (75,400)
L450 or X65	450 (65,300)	535 (77,600)	[c]	535 (77,600)
L485 or X70	485 (70,300)	570 (82,700)	[c]	570 (82,700)

[a] For intermediate grades, the difference between the specified minimum tensile strength and the specified minimum yield strength for the pipe body shall be as given in the table for the next higher grade.

[b] For intermediate grades, the specified minimum tensile strength for the weld seam shall be the same value as was determined for the pipe body using footnote a).

[c] The specified minimum elongation, A_f, expressed in percent and rounded to the nearest percent, shall be as determined using the following equation:

$$A_f = C\frac{A_{xc}^{0.2}}{U^{0.9}}$$

where

C is 1940 for calculations using SI units and 625,000 for calculations using USC units;

A_{xc} is the applicable tensile test piece cross-sectional area, expressed in square millimeters (square inches), as follows:

1) for circular cross-section test pieces, 130 mm² (0.20 in.²) for 12.7 mm (0.500 in.) and 8.9 mm (0.350 in.) diameter test pieces; 65 mm² (0.10 in.²) for 6.4 mm (0.250 in.) diameter test pieces;

2) for full-section test pieces, the lesser of a) 485 mm² (0.75 in.²) and b) the cross-sectional area of the test piece, derived using the specified outside diameter and the specified wall thickness of the pipe, rounded to the nearest 10 mm² (0.01 in.²);

3) for strip test pieces, the lesser of a) 485 mm² (0.75 in.²) and b) the cross-sectional area of the test piece, derived using the specified width of the test piece and the specified wall thickness of the pipe, rounded to the nearest 10 mm² (0.01 in.²);

U is the specified minimum tensile strength, expressed in megapascals (pounds per square inch).

Table 7—Requirements for the Results of Tensile Tests for PSL 2 Pipe

Pipe Grade	Pipe Body of Seamless and Welded Pipe						Weld Seam of HFW, SAW and COW Pipe
	Yield Strength [a] $R_{t0.5}$ MPa (psi)		Tensile Strength [a] R_m MPa (psi)		Ratio [a,c] $R_{t0.5}/R_m$	Elongation (on 50 mm or 2 in.) A_f %	Tensile Strength [d] R_m MPa (psi)
	min	max	min	max	max	min	min
L245R or BR L245N or BN L245Q or BQ L245M or BM	245 (35,500)	450 (65,300) [e]	415 (60,200)	655 (95,000)	0.93	[f]	415 (60,200)
L290R or X42R L290N or X42N L290Q or X42Q L290M or X42M	290 (42,100)	495 (71,800)	415 (60,200)	655 (95,000)	0.93	[f]	415 (60,200)
L320N or X46N L320Q or X46Q L320M or X46M	320 (46,400)	525 (76,100)	435 (63,100)	655 (95,000)	0.93	[f]	435 (63,100)
L360N or X52N L360Q or X52Q L360M or X52M	360 (52,200)	530 (76,900)	460 (66,700)	760 (110,200)	0.93	[f]	460 (66,700)
L390N or X56N L390Q or X56Q L390M or X56M	390 (56,600)	545 (79,000)	490 (71,100)	760 (110,200)	0.93	[f]	490 (71,100)
L415N or X60N L415Q or X60Q L415M or X60M	415 (60,200)	565 (81,900)	520 (75,400)	760 (110,200)	0.93	[f]	520 (75,400)
L450Q or X65Q L450M or X65M	450 (65,300)	600 (87,000)	535 (77,600)	760 (110,200)	0.93	[f]	535 (77,600)
L485Q or X70Q L485M or X70M	485 (70,300)	635 (92,100)	570 (82,700)	760 (110,200)	0.93	[f]	570 (82,700)
L555Q or X80Q L555M or X80M	555 (80,500)	705 (102,300)	625 (90,600)	825 (119,700)	0.93	[f]	625 (90,600)
L625M or X90M	625 (90,600)	775 (112,400)	695 (100,800)	915 (132,700)	0.95	[f]	695 (100,800)
L625Q or X90Q	625 (90,600)	775 (112,400)	695 (100,800)	915 (132,700)	0.97 [g]	[f]	—
L690M or X100M	690 (100,100) [b]	840 (121,800) [b]	760 (110,200)	990 (143,600)	0.97 [h]	[f]	760 (110,200)
L690Q or X100Q	690 (100,100) [b]	840 (121,800) [b]	760 (110,200)	990 (143,600)	0.97 [h]	[f]	—
L830M or X120M	830 (120,400) [b]	1050 (152,300) [b]	915 (132,700)	1145 (166,100)	0.99 [h]	[f]	915 (132,700)

[a] For intermediate grades, the difference between the specified maximum yield strength and the specified minimum yield strength shall be as given in the table for the next higher grade, and the difference between the specified minimum tensile strength and the specified minimum yield strength shall be as given in the table for the next higher grade; for intermediate grades up to Grade L320 or X46, the tensile strength shall be ≤ 655 MPa (95,000 psi); for intermediate grades greater than Grade L320 or X46 and lower than Grade L555 or X80, the tensile strength shall be ≤ 760 MPa (110,200 psi); for intermediate grades higher than Grade L555 or X80, the maximum permissible tensile strength shall be obtained by interpolation; for SI units, the calculated value shall be rounded to the nearest 5 MPa; for USC units, the calculated value shall be rounded to the nearest 100 psi.

[b] For grades > L625 or X90, $R_{p0.2}$ applies.

[c] This limit applies for pipe with D > 323.9 mm (12.750 in.).

[d] For intermediate grades, the specified minimum tensile strength for the weld seam shall be the same value as was determined for the pipe body using footnote a).

[e] For pipe requiring longitudinal testing, the maximum yield strength shall be ≤ 495 MPa (71,800 psi).

[f] The specified minimum elongation, A_f, shall be as determined using the following equation:

$$A_f = C\frac{A_{xc}^{0.2}}{U^{0.9}}$$

where

C is 1940 for calculations using SI units and 625,000 for calculations using USC units;

A_{xc} is the applicable tensile test piece cross-sectional area, expressed in square millimeters (square inches), as follows:

1) for circular cross-section test pieces, 130 mm^2 (0.20 in.^{2}) for 12.7 mm (0.500 in.) and 8.9 mm (0.350 in.) diameter test pieces; 65 mm^2 (0.10 in.^{2}) for 6.4 mm (0.250 in.) diameter test pieces;
2) for full-section test pieces, the lesser of a) 485 mm^2 (0.75 in.^{2}) and b) the cross-sectional area of the test piece, derived using the specified outside diameter and the specified wall thickness of the pipe, rounded to the nearest 10 mm^2 (0.01 in.^{2});
3) for strip test pieces, the lesser of a) 485 mm^2 (0.75 in.^{2}) and b) the cross-sectional area of the test piece, derived using the specified width of the test piece and the specified wall thickness of the pipe, rounded to the nearest 10 mm^2 (0.01 in.^{2});

U is the specified minimum tensile strength, expressed in megapascals (pounds per square inch).

[g] Lower values of $R_{t0.5}/R_m$ may be specified by agreement.

[h] For grades > L625 or X90, $R_{p0.2}/R_m$ applies. Lower values of $R_{p0.2}/R_m$ may be specified by agreement.

9.4 Hydrostatic Test

9.4.1 Except as allowed by 9.4.2, the pipe shall withstand the hydrostatic test without leakage through the weld seam or the pipe body.

9.4.2 Jointers need not be hydrostatically tested, provided that the portions of pipe used in making the jointers were successfully hydrostatically tested prior to the joining operation.

9.5 Bend Test

No cracks shall occur in any portion of the test piece, and no opening of the weld shall occur.

NOTE For bend tests, the weld extends to a distance of 6.4 mm (0.25 in.) on each side of the fusion line.

9.6 Flattening Test

Acceptance criteria for flattening tests shall be as follows.

a) EW pipe in grades ≥ L210 or A and LW pipe with D < 323.9 mm (12.750 in.).

   1) For grades ≥ L415 or X60 with t ≥ 12.7 mm (0.500 in.), there shall be no opening of the weld before the distance between the plates is less than 66 % of the original outside diameter. For all other combinations of pipe grade and specified wall thickness, there shall be no opening of the weld before the distance between the plates is less than 50 % of the original outside diameter.

   2) For pipe with a D/t > 10, there shall be no cracks or breaks other than in the weld before the distance between the plates is less than 33 % of the original outside diameter.

   3) There shall be no evidence of lamination or burnt metal during the entire test before opposite walls of the pipe meet.

b) EW and CW pipe in Grade L175, L175P, A25, or A25P.

   1) There shall be no opening of the weld before the distance between the plates is less than 75 % of the original outside diameter.

   2) There shall be no cracks or breaks other than in the weld before the distance between the plates is less than 60 % of the original outside diameter.

NOTE 1 The weld extends to a distance, on each side of the weld line, of 6.4 mm (0.25 in.) for D < 60.3 mm (2.375 in.) and 13 mm (0.5 in.) for D ≥ 60.3 mm (2.375 in.).

NOTE 2 For EW pipe that is processed through a hot-stretch mill and is flattened prior to such treatment, the original outside diameter is as designated by the manufacturer; for all other cases, the original outside diameter is the specified outside diameter.

NOTE 3 The term “opening of the weld” includes any cracks, breaks, or tears that become visible during the flattening test but does not include incipient cracking at the test piece edges.

9.7 Guided-bend Test

9.7.1 Except as allowed by 9.7.2, the test pieces shall not:

a) fracture completely;

b) reveal any cracks or ruptures in the weld metal longer than 3.2 mm (0.125 in.), regardless of depth;

c) reveal any cracks or ruptures in the parent metal, HAZ, or fusion line longer than 3.2 mm (0.125 in.) or deeper than 12.5 % of the specified wall thickness.

9.7.2 Cracks that occur at the edges of the test piece during testing shall not be cause for rejection, provided that they are not longer than 6.4 mm (0.250 in.).

9.8 CVN Impact Test for PSL 2 Pipe

9.8.1 General

9.8.1.1 If subsize test pieces are used, the required minimum average (of a set of three test pieces) absorbed energy values shall be the required values for full-size test pieces times the ratio of the specified width of the subsize test piece to the specified width of the full-size test piece, with such derived values rounded to the nearest joule (foot-pound force).

9.8.1.2 Individual test values for any test piece shall be ≥ 75 % of the required minimum average (of a set of three test pieces) absorbed energy values.

9.8.1.3 Tests conducted at temperatures lower than the specified test temperature shall be acceptable if the applicable requirements for energy absorption and shear fracture area are met at such lower temperatures.

9.8.2 Pipe Body Tests

9.8.2.1 The minimum average (of a set of three test pieces) absorbed energy for each pipe body test shall be as given in Table 8, based on full-size test pieces and a test temperature of 0 °C (32 °F) or, if agreed, a lower test temperature.

NOTE The energy values specified in Table 8 provide sufficient fracture-initiation resistance for most pipeline designs.

9.8.2.2 For welded pipe with D < 508 mm (20.000 in.), if agreed, the minimum average (of a set of three test pieces) shear fracture area for each test shall be at least 85 %, based on a test temperature of 0 °C (32 °F) or, if agreed, a lower test temperature.

NOTE This percentage of shear fracture area ensures sufficiently ductile fracture at or above the test temperature.

9.8.2.3 If 9.8.2.2 does not apply for the order item, the shear fracture area on the CVN specimen shall be estimated and reported for information purposes for all grades and sizes of pipe that have been CVN tested, unless otherwise agreed.

Table 8—CVN Absorbed Energy Requirements for Pipe Body of PSL 2 Pipe

Specified Outside Diameter D mm (in.)	Full-size CVN Absorbed Energy min K_V J (ft·lbf)						
	Grade						
	≤ L415 or X60	> L415 or X60 to ≤ L450 or X65	> L450 or X65 to ≤ L485 or X70	> L485 or X70 to ≤ L555 or X80	> L555 or X80 to ≤ L625 or X90	> L625 or X90 to ≤ L690 or X100	> L690 or X100 to ≤ L830 or X120
≤ 508 (20.000)	27 (20)	27 (20)	27 (20)	40 (30)	40 (30)	40 (30)	40 (30)
> 508 (20.000) to 762 (30.000)	27 (20)	27 (20)	27 (20)	40 (30)	40 (30)	40 (30)	40 (30)
> 762 (30.000) to 914 (36.000)	40 (30)	40 (30)	40 (30)	40 (30)	40 (30)	54 (40)	54 (40)
> 914 (36.000) to 1219 (48.000)	40 (30)	40 (30)	40 (30)	40 (30)	40 (30)	54 (40)	68 (50)
> 1219 (48.000) to 1422 (56.000)	40 (30)	54 (40)	54 (40)	54 (40)	54 (40)	68 (50)	81 (60)
> 1422 (56.000) to 2134 (84.000)	40 (30)	54 (40)	68 (50)	68 (50)	81 (60)	95 (70)	108 (80)

9.8.3 Pipe Weld and HAZ Tests

The minimum average (of a set of three test pieces) absorbed energy for each pipe weld and HAZ test, based on full-size test pieces and a test temperature of 0 °C (32 °F) or, if agreed, a lower test temperature, shall be as follows:

a) 27 J (20 ft·lbf) for pipe with D < 1422 mm (56.000 in.) in grades ≤ L555 or X80;

b) 40 J (30 ft·lbf) for pipe with D ≥ 1422 mm (56.000 in.);

c) 40 J (30 ft·lbf) for pipe in grades > L555 or X80.

9.9 DWT Test for PSL 2 Welded Pipe

9.9.1 For each test (of a set of two test pieces), the average shear fracture area shall be ≥ 85 %, based on a test temperature of 0 °C (32 °F) or, if agreed, a lower test temperature. For wall thickness > 25.4 mm (1.000 in.), DWT test acceptance requirements shall be by agreement.

NOTE 1 Such shear-fracture area ensures a sufficiently ductile fracture at or above the test temperature.

NOTE 2 A sufficient combination of shear-fracture area and CVN absorbed energy is an essential pipe-body property to ensure the avoidance of brittle fracture propagation and the control of ductile fracture propagation in gas pipelines (see Annex G and Table 20).

9.9.2 Tests conducted at temperatures lower than the specified test temperature shall be acceptable if the applicable requirements for shear fracture area are met at such lower temperatures.

9.10 Surface Conditions, Imperfections, and Defects

9.10.1 General

9.10.1.1 All pipe shall be free from defects in the finished condition.

9.10.1.2 All pipe shall be free from cracks, sweats, and leaks.

9.10.1.3 The acceptance criteria for imperfections found by nondestructive inspection shall be in accordance with Annex E.

9.10.2 Undercuts

Undercuts in SAW and COW pipe shall be investigated, classified, and treated as follows.

a) Undercuts that have a depth ≤ 0.4 mm (0.016 in.) are acceptable, regardless of length, and shall be treated in accordance with C.1.

b) Undercuts that have a depth > 0.4 mm (0.016 in.) but ≤ 0.8 mm (0.031 in.) are acceptable provided they are treated in accordance with C.2 and provided that:

   1) their individual lengths are ≤ 0.5t,

   2) their individual depths are ≤ 0.1t, and

   3) there are no more than two such undercuts in any 300 mm (12.0 in.) length of weld.

c) Undercuts that exceed the limits specified in item b) shall be classified as defects and shall be treated in accordance with C.3.

NOTE Undercuts can best be located visually.

9.10.3 Arc Burns

9.10.3.1 Arc burns shall be classified as defects.

NOTE 1 Arc burns are localized points of surface melting caused by arcing between the electrode or ground and the pipe surface.

NOTE 2 Contact marks, which are intermittent marks adjacent to the weld line of EW pipe resulting from electrical contact between the electrodes supplying the welding current and the pipe surface, are treated in accordance with 9.10.7.

9.10.3.2 Arc burns shall be treated in accordance with C.2, C.3 b), or C.3 c), except that they may be removed by grinding, chipping, or machining, provided that the resultant cavity is thoroughly cleaned and checked for complete removal of damaged material by etching with a 10 % solution of ammonium persulfate or a 5 % solution of nital.

9.10.4 Laminations

Laminations or inclusions extending into the face or bevel of the pipe and having a visually determined length in the circumferential direction > 6.4 mm (0.250 in.) shall be classified as defects. Pipes that contain such defects shall be rejected or cut back until no such lamination or inclusion is present at the pipe ends.

9.10.5 Geometric Deviations

9.10.5.1 For other than dents, geometric deviations from the normal cylindrical contour of the pipe (e.g. flat spots and peaks) that occur as a result of the pipe forming process or manufacturing operations and that exceed 3.2 mm (0.125 in.) in depth, measured as the gap between the extreme point of the deviation

and the prolongation of the normal contour of the pipe, shall be considered defects and shall be treated in accordance with C.3 b) or C.3 c).

9.10.5.2 For dents, the length in any direction shall be ≤ 0.5D and the depth, measured as the gap between the extreme point of the dent and the prolongation of the normal contour of the pipe, shall not exceed the following:

a) 3.2 mm (0.125 in.) for cold-formed dents with sharp-bottom gouges;

b) 6.4 mm (0.250 in.) for other dents.

Dents that exceed the specified limits shall be considered defects and shall be treated in accordance with C.3 b) or C.3 c).

9.10.6 Hard Spots

Any hard spot larger than 50 mm (2.0 in.) in any direction shall be classified as a defect if its hardness exceeds 35 HRC, 345 HV10, or 327 HBW, based on individual indentations. Pipes that contain such defects shall be treated in accordance with C.3 b) or C.3 c).

9.10.7 Other Surface Imperfections

Other surface imperfections found by visual inspection shall be investigated, classified, and treated as follows.

a) Imperfections that have a depth ≤ 0.125t and do not encroach on the minimum permissible wall thickness shall be classified as acceptable imperfections and shall be treated in accordance with C.1.

b) Imperfections that have a depth > 0.125t and do not encroach on the minimum permissible wall thickness shall be classified as defects and shall be dressed-out by grinding in accordance with C.2 or shall be treated in accordance with C.3.

c) Imperfections that encroach on the minimum permissible wall thickness shall be classified as defects and shall be treated in accordance with C.3.

NOTE "Imperfections that encroach on the minimum permissible wall thickness" implies that the portion of the wall thickness that is beneath the surface imperfection is less than the minimum permissible wall thickness.

9.11 Dimensions, Mass, and Tolerances

9.11.1 Dimensions

9.11.1.1 The pipe shall be delivered to the dimensions specified in the purchase order, subject to the applicable tolerances.

9.11.1.2 The specified outside diameter and specified wall thickness shall be within the applicable limits given in Table 9.

9.11.1.3 The pipe shall be delivered in random lengths or approximate length, as specified in the purchase order.

9.11.2 Mass per Unit Length

The mass per unit length, ρ_l, expressed in kilograms per meter (pounds per foot), shall be calculated using Equation (4):

$$\rho_l = t(D - t) \times C \tag{4}$$

where

D is the specified outside diameter, expressed in millimeters (inches);

t is the specified wall thickness, expressed in millimeters (inches);

C is 0.02466 for calculations in SI units and 10.69 for calculations in USC units.

For threaded-and-coupled pipe, the weights determined as described above shall conform to the calculated weights or adjusted calculated weights within the tolerances specified in 9.14.

NOTE The nominal mass of a pipe is the product of its length and its mass per unit length.

Table 9—Permissible Specified Outside Diameter and Specified Wall Thickness

Specified Outside Diameter D mm (in.)	Specified Wall Thickness t mm (in.)	
	Special Light Sizes [a]	Regular Sizes
≥ 10.3 (0.405) to < 13.7 (0.540)	—	≥ 1.7 (0.068) to ≤ 2.4 (0.094)
≥ 13.7 (0.540) to < 17.1 (0.675)	—	≥ 2.2 (0.088) to ≤ 3.0 (0.118)
≥ 17.1 (0.675) to < 21.3 (0.840)	—	≥ 2.3 (0.091) to ≤ 3.2 (0.125)
≥ 21.3 (0.840) to < 26.7 (1.050)	—	≥ 2.1 (0.083) to ≤ 7.5 (0.294)
≥ 26.7 (1.050) to < 33.4 (1.315)	—	≥ 2.1 (0.083) to ≤ 7.8 (0.308)
≥ 33.4 (1.315) to < 48.3 (1.900)	—	≥ 2.1 (0.083) to ≤ 10.0 (0.394)
≥ 48.3 (1.900) to < 60.3 (2.375)	—	≥ 2.1 (0.083) to ≤ 12.5 (0.492)
≥ 60.3 (2.375) to < 73.0 (2.875)	≥ 2.1 (0.083) to ≤ 3.6 (0.141)	> 3.6 (0.141) to ≤ 14.2 (0.559)
≥ 73.0 (2.875) to < 88.9 (3.500)	≥ 2.1 (0.083) to ≤ 3.6 (0.141)	> 3.6 (0.141) to ≤ 20.0 (0.787)
≥ 88.9 (3.500) to < 101.6 (4.000)	≥ 2.1 (0.083) to ≤ 4.0 (0.156)	> 4.0 (0.156) to ≤ 22.0 (0.866)
≥ 101.6 (4.000) to < 168.3 (6.625)	≥ 2.1 (0.083) to ≤ 4.0 (0.156)	> 4.0 (0.156) to ≤ 25.0 (0.984)
≥ 168.3 (6.625) to < 219.1 (8.625)	≥ 2.1 (0.083) to ≤ 4.0 (0.156)	> 4.0 (0.156) to ≤ 40.0 (1.575)
≥ 219.1 (8.625) to < 273.1 (10.750)	≥ 3.2 (0.125) to ≤ 4.0 (0.156)	> 4.0 (0.156) to ≤ 40.0 (1.575)
≥ 273.1 (10.750) to < 323.9 (12.750)	≥ 3.6 (0.141) to ≤ 5.2 (0.203)	> 5.2 (0.203) to ≤ 45.0 (1.771)
≥ 323.9 (12.750) to < 355.6 (14.000)	≥ 4.0 (0.156) to ≤ 5.6 (0.219)	> 5.6 (0.219) to ≤ 45.0 (1.771)
≥ 355.6 (14.000) to < 457 (18.000)	≥ 4.5 (0.177) to ≤ 7.1 (0.281)	> 7.1 (0.281) to ≤ 45.0 (1.771)
≥ 457 (18.000) to < 559 (22.000)	≥ 4.8 (0.188) to ≤ 7.1 (0.281)	> 7.1 (0.281) to ≤ 45.0 (1.771)
≥ 559 (22.000) to < 711 (28.000)	≥ 5.6 (0.219) to ≤ 7.1 (0.281)	> 7.1 (0.281) to ≤ 45.0 (1.771)
≥ 711 (28.000) to < 864 (34.000)	≥ 5.6 (0.219) to ≤ 7.1 (0.281)	> 7.1 (0.281) to ≤ 52.0 (2.050)
≥ 864 (34.000) to < 965 (38.000)	—	≥ 5.6 (0.219) to ≤ 52.0 (2.050)
≥ 965 (38.000) to < 1422 (56.000)	—	≥ 6.4 (0.250) to ≤ 52.0 (2.050)
≥ 1422 (56.000) to < 1829 (72.000)	—	≥ 9.5 (0.375) to ≤ 52.0 (2.050)
≥ 1829 (72.000) to < 2134 (84.000)	—	≥ 10.3 (0.406) to ≤ 52.0 (2.050)

NOTE Standardized values for specified outside diameter and specified wall thickness of pipe are given in ISO 4200 [7] and ASME B36.10M [8].

[a] Pipe having the combination of specified outside diameter and specified wall thickness is defined as special light size pipe; other combinations given in this table are defined as regular size pipe.

9.11.3 Tolerances for Diameter, Wall Thickness, Length, and Straightness

9.11.3.1 Except as allowed by C.2.3, the diameter and out-of-roundness shall be within the tolerances given in Table 10 (see 10.2.8.2).

9.11.3.2 The tolerances for wall thickness shall be as given in Table 11.

Table 10—Tolerances for Diameter and Out-of-roundness

Specified Outside Diameter D mm (in.)	Diameter Tolerances [d] mm (in.)				Out-of-roundness Tolerances mm (in.)	
	Pipe Except the End [a]		Pipe End [a,b,c]		Pipe Except the End [a]	Pipe End [a,b,c]
	SMLS Pipe	Welded Pipe	SMLS Pipe	Welded Pipe		
< 60.3 (2.375)	–0.8 (0.031) to +0.4 (0.016)		–0.8 (0.031) to +0.4 (0.016)		1.2 (0.048)	0.9 (0.036)
≥ 60.3 (2.375) to 168.3 (6.625)	±0.0075D		–0.4 (0.016) to +1.6 (0.063)		0.020D for $\frac{D}{t} \le 75$; by agreement for $\frac{D}{t} > 75$	0.015D for $\frac{D}{t} \le 75$; by agreement for $\frac{D}{t} > 75$
> 168.3 (6.625) to 610 (24.000)	±0.0075D	±0.0075D, but maximum of ±3.2 (0.125)	±0.005D, but maximum of ±1.6 (0.063)		0.020D	0.015D
> 610 (24.000) to 1422 (56.000)	±0.01D	±0.005D, but maximum of ±4.0 (0.160)	±2.0 (0.079)	±1.6 (0.063)	0.015D, but maximum of 15 (0.6) for $\frac{D}{t} \le 75$; by agreement for $\frac{D}{t} > 75$	0.01D, but maximum of 13 (0.5) for $\frac{D}{t} \le 75$; by agreement for $\frac{D}{t} > 75$
> 1422 (56.000)	As agreed					

[a] The pipe end includes a length of 100 mm (4.0 in.) at each of the pipe extremities.

[b] For SMLS pipe, the tolerances apply for $t \le 25.0$ mm (0.984 in.), and the tolerances for thicker pipe shall be as agreed.

[c] For expanded pipe with $D \ge 219.1$ mm (8.625 in.) and for nonexpanded pipe, the diameter tolerance and the out-of-roundness tolerance may be determined using the calculated inside diameter (the specified outside diameter minus two times the specified wall thickness) or measured inside diameter rather than the specified outside diameter (see 10.2.8.3).

[d] For determining compliance to diameter tolerances, the pipe diameter is defined as the circumference of the pipe in any circumferential plane divided by pi (π).

Table 11—Tolerances for Wall Thickness

Wall Thickness t mm (in.)	Tolerances [a] mm (in.)
SMLS Pipe [b]	
≤ 4.0 (0.157)	+0.6 (0.024) –0.5 (0.020)
> 4.0 (0.157) to < 25.0 (0.984)	+0.150t –0.125t
≥ 25.0 (0.984)	+3.7 (0.146) or +0.1t, whichever is the greater –3.0 (0.120) or –0.1t, whichever is the greater
Welded Pipe [c,d]	
≤ 5.0 (0.197)	± 0.5 (0.020)
> 5.0 (0.197) to < 15.0 (0.591)	± 0.1t
≥ 15.0 (0.591)	± 1.5 (0.060)

[a] If the purchase order specifies a minus tolerance for wall thickness smaller than the applicable value given in this table, the plus tolerance for wall thickness shall be increased by an amount sufficient to maintain the applicable tolerance range.

[b] For pipe with D ≥ 355.6 mm (14.000 in.) and t ≥ 25.0 mm (0.984 in.), the wall thickness tolerance locally may exceed the plus tolerance for wall thickness by an additional 0.05t, provided that the plus tolerance for mass (see 9.14) is not exceeded.

[c] The plus tolerance for wall thickness does not apply to the weld area.

[d] See 9.13.2 for additional restrictions.

9.11.3.3 The tolerances for length shall be as follows.

a) Unless otherwise agreed, random lengths shall be delivered within the tolerances given in Table 12.

b) Approximate lengths shall be delivered within a tolerance of ± 500 mm (20 in.).

c) If the supply of jointers is agreed, jointers comprising two pieces welded together to make a length shorter than 15.0 m (49.2 ft) may be furnished to a maximum of 5 % of the order item, or as agreed.

d) If the supply of jointers is agreed, jointers comprising two pieces welded together to make a length 15.0 m (49.2 ft) or longer may be furnished for the entire order item or any portion thereof.

e) If the supply of jointers is agreed, jointers comprising three pieces welded together to make a length 15.0 m (49.2 ft) or longer may be furnished to a maximum of 5 % of the order item, or as agreed.

Table 12—Tolerances for Random Length Pipe

Random Length Designation m (ft)	Minimum Length m (ft)	Minimum Average Length for Each Order Item m (ft)	Maximum Length m (ft)
Threaded-and-coupled Pipe			
6 (20)	4.88 (16.0)	5.33 (17.5)	6.86 (22.5)
9 (30)	4.11 (13.5)	8.00 (26.2)	10.29 (33.8)
12 (40)	6.71 (22.0)	10.67 (35.0)	13.72 (45.0)
Plain-end Pipe			
6 (20)	2.74 (9.0)	5.33 (17.5)	6.86 (22.5)
9 (30)	4.11 (13.5)	8.00 (26.2)	10.29 (33.8)
12 (40)	4.27 (14.0)	10.67 (35.0)	13.72 (45.0)
15 (50)	5.33 (17.5)	13.35 (43.8)	16.76 (55.0)
18 (60)	6.40 (21.0)	16.00 (52.5)	19.81 (65.0)
24 (80)	8.53 (28.0)	21.34 (70.0)	25.91 (85.0)

9.11.3.4 The tolerances for straightness shall be as follows.

a) The total deviation from a straight line, over the entire pipe length, shall be ≤ 0.2 % of the pipe length, as shown in Figure 1.

b) The local deviation from a straight line in the 1.5 m (5.0 ft) portion at each pipe end shall be ≤ 3.2 mm (0.125 in.), as shown in Figure 2.

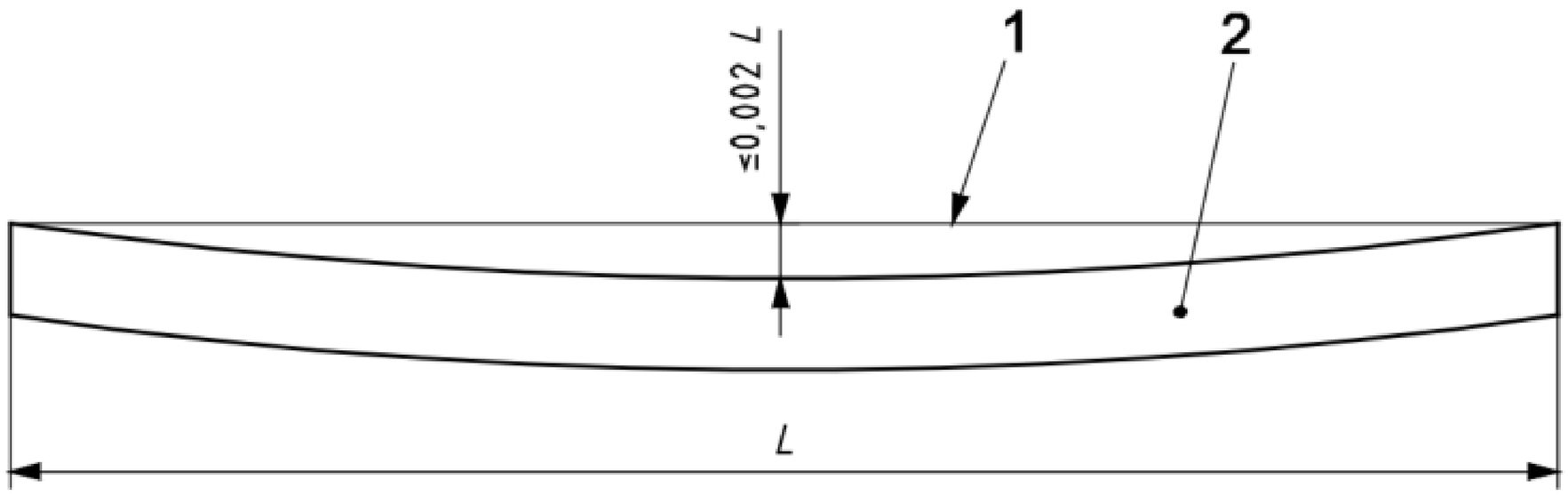

Key
1 taut string or wire
2 pipe

Figure 1—Measuring Full-length Straightness

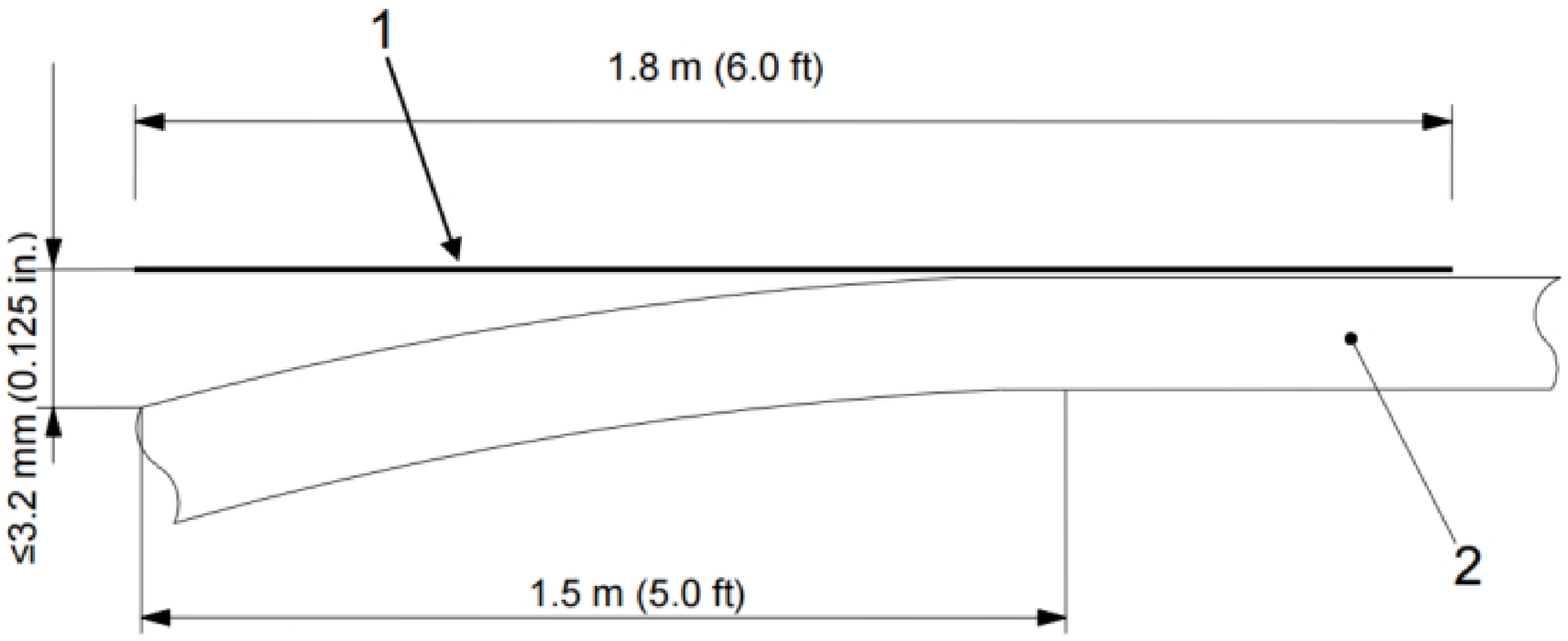

Key

1 straight line

2 pipe

Figure 2—Measuring End Straightness

9.12 Finish of Pipe Ends

9.12.1 General

9.12.1.1 Grade L175P or A25P PSL 1 pipe shall be furnished with threaded ends; other grades of PSL 1 pipe shall be furnished with plain ends, unless another acceptable end finish (see Table 2) is specified in the purchase order.

9.12.1.2 PSL 2 pipe shall be furnished with plain ends.

9.12.1.3 Pipe ends shall be free from burrs.

9.12.2 Threaded Ends (PSL 1 Only)

9.12.2.1 Threaded ends shall conform to the threading, thread inspection, and gauging requirements of API 5B.

9.12.2.2 One end of each length of threaded pipe shall be provided with a coupling conforming to the requirements of Annex F, and the other end shall be provided with thread protection conforming to the requirements of 12.2.

9.12.2.3 Couplings shall be screwed onto the pipe handling-tight or, if agreed, power-tight.

NOTE "Handling-tight" means sufficiently tight that the coupling cannot be removed without using a wrench; the purpose of making up couplings handling-tight is to facilitate removal of the couplings for cleaning and inspecting threads and applying fresh thread compound before laying the pipe; this procedure has been found necessary to prevent thread leakage, especially in gas pipelines, because manufacturer-applied couplings made up power-tight, although leak proof at the time of make-up, might not always remain so after transportation, handling, and laying.

9.12.2.4 Before making up the joint, a thread compound that meets the performance objectives in API 5A3 or ISO 13678 shall be applied to cover the full surface of either the coupling or the pipe engaged

threads. The exposed threads shall be coated with this thread compound or a storage compound of distinct color. Unless otherwise agreed, the choice of thread compound is at the option of the manufacturer. Whichever compound is used, it shall be applied to a surface that is clean and reasonably free of moisture and cutting fluids.

9.12.3 Belled Ends (PSL 1 Only)

9.12.3.1 Belled-end pipe shall be furnished with one end belled in accordance with the configuration and dimensions specified in the purchase order.

9.12.3.2 Belled ends shall be visually inspected for conformance with 9.10.

9.12.4 Ends Prepared for Special Couplings (PSL 1 Only)

9.12.4.1 Where applicable, pipe shall be furnished with both ends prepared for use with special couplings, with the configuration and dimensions as specified in the purchase order.

9.12.4.2 The pipe shall be sufficiently free from indentations, projections, and roll marks for a distance of at least 200 mm (8.0 in.) from each pipe end in order to permit proper make-up of the couplings.

9.12.5 Plain Ends

9.12.5.1 Unless otherwise agreed, the end faces of plain-end pipe with $t \leq 3.2$ mm (0.125 in.) shall be square cut.

9.12.5.2 Unless otherwise agreed, the end faces of plain-end pipe with $t > 3.2$ mm (0.125 in.) shall be beveled for welding. Except as allowed by 9.12.5.3, the angle of the bevel, measured from a line drawn perpendicular to the axis of the pipe, shall be 30° with a tolerance of $^{+5^\circ}_{-0^\circ}$, and the width of the root face of the bevel shall be 1.6 mm (0.063 in.), with a tolerance of ± 0.8 mm (0.031 in.).

9.12.5.3 If agreed, other bevel preparations may be furnished, for example on the basis of ISO 6761 [9].

9.12.5.4 Where internal machining or grinding is carried out in SMLS pipe, the angle of the internal taper, measured from the longitudinal axis, shall not exceed the applicable value given in Table 13.

9.12.5.5 For the removal of an internal burr on welded pipe $D > 114.3$ mm (4.500 in.), the internal taper, as measured from the longitudinal axis, shall be no greater than 7.0°.

Table 13—Maximum Angle of Internal Taper for SMLS Pipe

Specified Wall Thickness t mm (in.)	Maximum Angle of Taper degrees
< 10.5 (0.413)	7.0
10.5 (0.413) to < 14.0 (0.551)	9.5
14.0 (0.551) to < 17.0 (0.669)	11.0
≥ 17.0 (0.669)	14.0

9.12.6 End Squareness

9.12.6.1 End squareness is defined as square to the end of the pipe.

9.12.6.1.1 For pipe outside diameters 610 mm (24 in.) and larger, end squareness is measured over the last 610 mm (24 in.) from the pipe end.

9.12.6.1.2 For pipe outside diameters less than 610 mm (24 in.), end squareness is measured from the pipe end over a distance selected by the manufacturer between one pipe diameter and 610 mm (24 in.).

9.12.6.2 End squareness may be measured by any technique that is demonstrated to properly determine the out-of-squareness.

If a fixed square is used to measure the out-of-squareness, the pipe body leg length shall be the distance established in 9.12.6.1.1 or 9.12.6.1.2 or 305 mm (12 in.), whichever is greater. The pipe end leg length shall be at least the diameter of the pipe OD being measured, as shown in Figure 3.

9.12.6.3 The out-of-squareness, as shown in Figure 3, shall be ≤ 1.6 mm (0.063 in.). The out-of-squareness is measured as the gap between the end of the pipe and the pipe end leg.

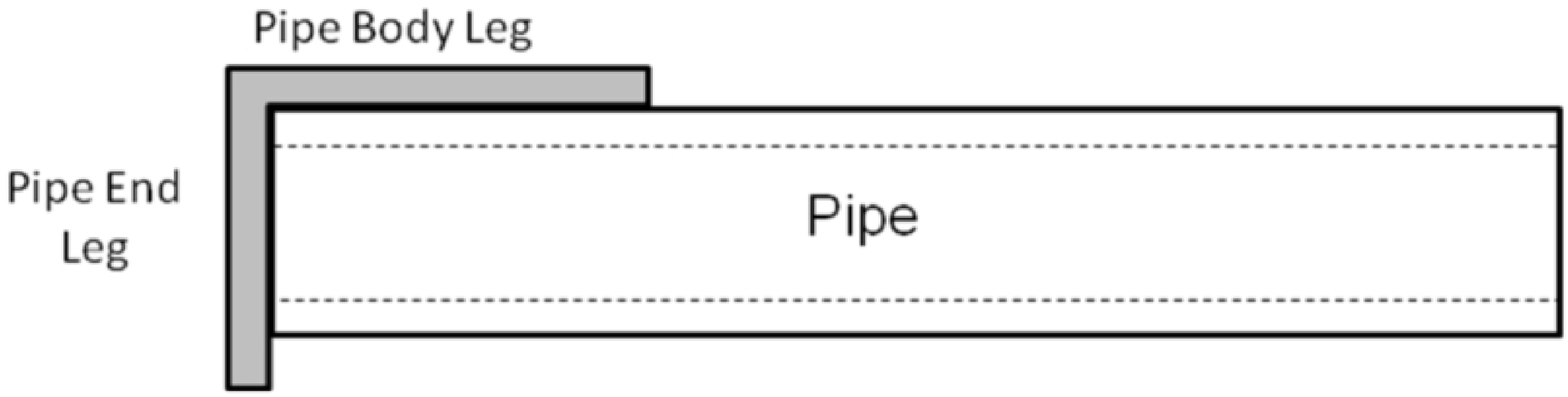

Figure 3—Reference When Using a Fixed Square Measurement

9.13 Tolerances for the Weld Seam

9.13.1 Radial Offset of Strip/Plate Edges

For EW and LW pipe, the radial offset of the strip/plate edges [see Figure 4 a)] shall not cause the remaining wall thickness at the weld to be less than the minimum permissible wall thickness.

For SAW and COW pipe, the radial offset of the strip/plate edges [see Figure 4 b) or Figure 4 c), whichever is applicable] shall not exceed the applicable value given in Table 14.

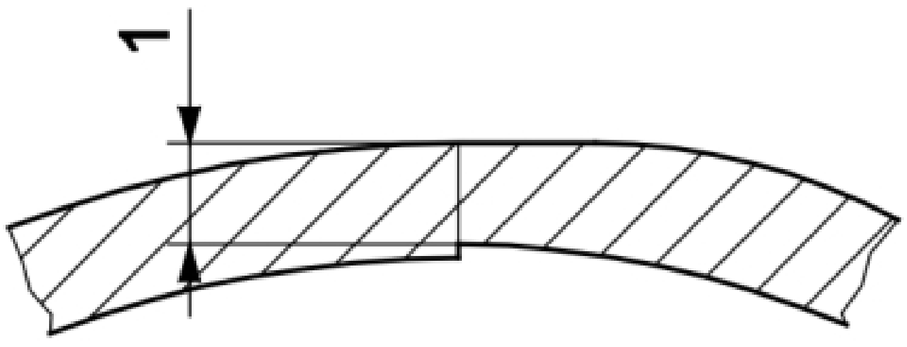

Key

1 remaining wall thickness at the weld

a) Radial offset of strip/plate edges of EW and LW pipe

Figure 4—Dimensional Deviations of the Weld Seam

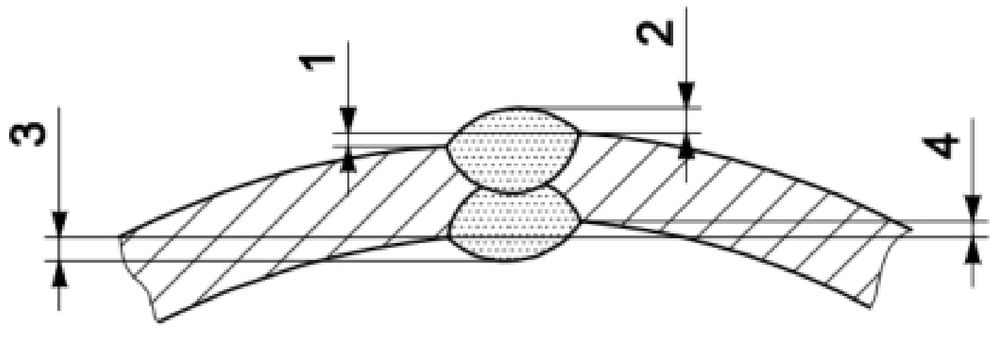

Key
1 outside radial offset
2 height of outside weld bead
3 height of inside weld bead
4 inside radial offset

b) Radial offset of strip/plate edges and height of weld beads of SAW pipe

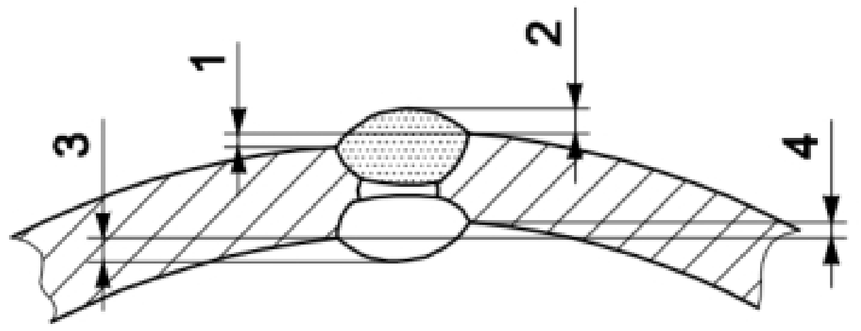

Key
1 outside radial offset
2 height of outside weld bead
3 height of inside weld bead
4 inside radial offset

c) Radial offset of strip/plate edges and height of weld beads of COW pipe

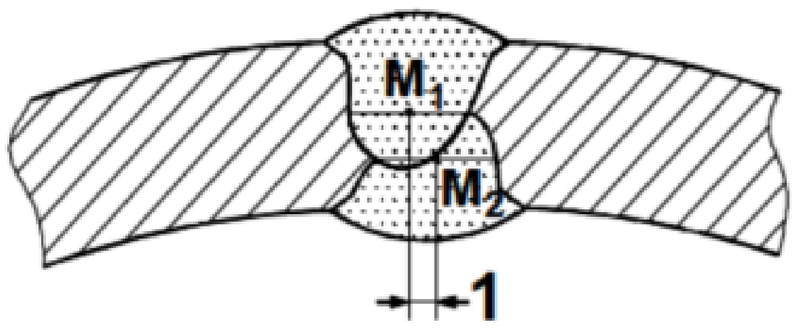

Key
M_1, M_2 midpoints of two parallel lines across the weld bead that are parallel to the tangent of the pipe surface and cross the intersections of the internal and external weld bead fusion lines
1 misalignment distance, which is the distance between two lines through points M_1 and M_2 but perpendicular to the tangent of the pipe surface

d) Misalignment of weld beads of SAW pipe

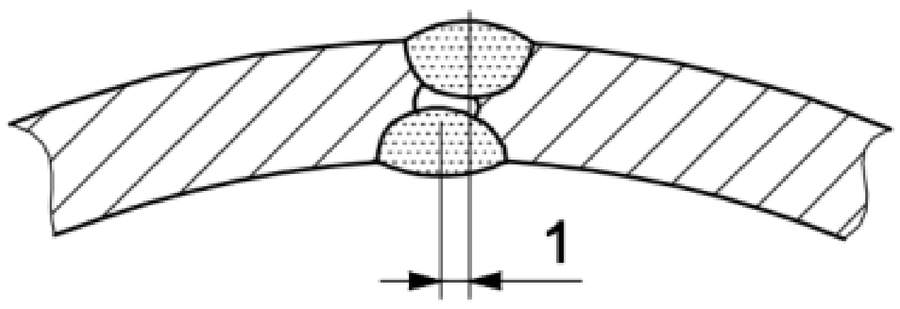

Key
1 misalignment

e) Misalignment of weld beads of COW pipe

Figure 4—Dimensional Deviations of the Weld Seam *(continued)*

Table 14—Maximum Permissible Radial Offset for SAW and COW Pipe

Specified Wall Thickness t mm (in.)	Maximum Permissible Radial Offset [a] mm (in.)
≤ 15.0 (0.590)	1.5 (0.060)
> 15.0 (0.590) to 25.0 (0.984)	0.1t
> 25.0 (0.984)	2.5 (0.098)

[a] These limits apply also to strip/plate end welds.

9.13.2 Height of the Flash or Weld Bead/Reinforcement

9.13.2.1 For EW and LW pipe, the following shall apply.

a) The outside flash shall be trimmed to an essentially flush condition.

b) The inside flash shall not extend above the contour of the pipe by more than 1.5 mm (0.060 in.).

c) The wall thickness at the trim shall not be less than the minimum permissible wall thickness.

d) The depth of groove resulting from trimming the internal flash shall not exceed the applicable value given in Table 15.

Table 15—Maximum Permissible Depth of Groove for EW and LW Pipe

Specified Wall Thickness t mm (in.)	Maximum Permissible Depth of Groove [a] mm (in.)
≤ 4.0 (0.156)	0.10t
> 4.0 (0.156) to 8.0 (0.312)	0.40 (0.016)
> 8.0 (0.312)	0.05t

[a] The depth of groove is the difference between the wall thickness, that is 25 mm (1 in.) or as close to that measurement as possible, from the weld line and the minimum wall thickness at the trim.

9.13.2.2 For SAW and COW pipe, the following shall apply.

a) Except at undercuts, the crown surfaces of the as-deposited inside and outside weld beads shall not be below the adjacent pipe surface.

b) Weld beads shall blend in smoothly with the adjacent pipe surface.

c) For a distance of at least 100 mm (4.0 in.) from each pipe end, the inside weld bead shall be removed by grinding such that it does not extend above the adjacent pipe surface by more than 0.5 mm (0.020 in.). For the remainder of the pipe, the inside weld bead shall not extend above the adjacent pipe surface by more than the applicable value given in Table 16.

d) The outside weld bead shall not extend above the adjacent pipe surface by more than the applicable value given in Table 16.

e) If agreed, for a distance of at least 150 mm (6.0 in.) from each pipe end, the outside weld bead shall be removed by grinding such that it does not extend above the adjacent pipe surface by more than 0.5 mm (0.020 in.).

Table 16—Maximum Permissible Weld Bead Height for SAW and COW Pipe (Except at Pipe Ends)

Specified Wall Thickness *t* mm (in.)	Weld Bead Height [a] mm (in.) maxim	
	Internal Bead	External Bead
≤ 13.0 (0.512)	3.5 (0.138)	3.5 (0.138)
> 13.0 (0.512)	3.5 (0.138)	4.5 (0.177)

[a] At the option of the manufacturer, weld beads higher than permitted may be ground to acceptable heights.

9.13.3 Misalignment of the Weld Beads of SAW and COW Pipe

Misalignment of the weld beads of SAW pipe [see Figure 4 d)] and COW pipe [see Figure 4 e)] shall not be cause for rejection if it is within the limits that follow and provided that complete penetration and complete fusion have been achieved, as indicated by nondestructive inspection. The maximum misalignment of the weld beads shall not exceed 3 mm (0.1 in.) for pipe with specified wall thickness $t \leq 20$ mm (0.8 in.) or 4 mm (0.16 in.) for pipe with specified wall thickness > 20 mm (0.8 in.).

9.14 Tolerances for Mass

9.14.1 Except as allowed by 9.14.2, the mass of each individual pipe shall not deviate from its nominal mass, as determined by multiplying its length by its mass per unit length (see 9.11.2), by more than the following:

a) for special light size pipe (see Table 9): $\frac{+10.0\ \%}{-5.0\ \%}$;

b) for pipe in Grade L175, L175P, A25, and A25P: $\frac{+10.0\ \%}{-5.0\ \%}$;

c) for all other pipes: $\frac{+10.0\ \%}{-3.5\ \%}$.

9.14.2 If the purchase order specifies a minus tolerance for wall thickness smaller than the applicable value given in Table 11, the plus tolerance for mass shall be increased by a percentage equivalent to the applicable percentage reduction of the minus tolerance for wall thickness.

9.14.3 For each order item with a mass of 18 tonnes (20 ton) or more, the mass of the order item shall not deviate from its nominal mass, determined by multiplying the total length of pipe in the order item by its mass per unit length (see 9.11.2), by more than the following:

a) for grades L175, L175P, A25, and A25P: –3.5 %;

b) for all other grades: –1.75 %.

9.15 Weldability of PSL 2 Pipe

If agreed, the manufacturer shall supply weldability data for the type of steel concerned or perform weldability tests, for which the details for carrying out the tests and the acceptance criteria shall be as specified in the purchase order.

The requirements for the chemical composition of the steels and, in particular, the limiting values of CE_{Pcm} and CE_{IIW} (see Table 5, Table H.1, or Table J.1, whichever is applicable) have been selected to facilitate weldability; however, account should be taken of the fact that the behavior of the steel during and after welding is dependent not only on the steel composition, but also on the welding consumables used and the conditions of preparing for, and carrying out, welding.

10 Inspection

10.1 Types of Inspection and Inspection Documents

10.1.1 General

10.1.1.1 Compliance with the requirements of the purchase order shall be checked by specific inspection in accordance with ISO 10474.

NOTE 1 In ISO 10474, "specific inspection" is referred to as "specific inspection and testing."

NOTE 2 For the purpose of this provision, EN 10204 is equivalent to ISO 10474.

NOTE 3 The term "inspection documents" as used in 10.1.2 and 10.1.3 is equivalent to, and interchangeable with, the term "material test reports."

10.1.1.2 Inspection documents shall be in printed form or in electronic form as an electronic data interchange (EDI) transmission that conforms to any EDI agreement between the purchaser and the manufacturer.

10.1.2 Inspection Documents for PSL 1 Pipe

10.1.2.1 If agreed, an Inspection Certificate 3.1.A, 3.1.B, or 3.1.C in accordance with ISO 10474:1991 or an Inspection Certificate 3.1 or 3.2 in accordance with EN 10204:2004 shall be issued.

10.1.2.2 If supply of an inspection document is agreed, the following information, as applicable, shall be provided for each order item:

a) specified outside diameter, specified wall thickness, PSL, type of pipe, pipe grade, and the delivery condition;

b) chemical composition (heat and product);

c) tensile test results and the type, size, location, and orientation of the test pieces;

d) specified minimum hydrostatic test pressure and specified test duration;

e) for welded pipe, the method of nondestructive weld inspection (radiological, ultrasonic, or electromagnetic) used and the type and size of reference indicator or IQI used;

f) for SMLS pipe, the method of nondestructive inspection (ultrasonic, electromagnetic, or magnetic particle) used and the type and size of the reference indicator used;

g) for EW and LW pipe, the minimum temperature for heat treatment of the weld seam or "no heat treatment" if no heat treatment was performed;

h) results of any supplementary testing specified in the purchase order;

i) for pipe with welded jointer, coupled and/or TFL pipe certification that the product meets the requirements of Annexes M , F, and/or I, as applicable;

j) name and location of facilities used for pipe manufacturing, plate/coil rolling, and steelmaking.

10.1.3 Inspection Documents for PSL 2 Pipe

10.1.3.1 The manufacturer shall issue an Inspection Certificate 3.1.B in accordance with ISO 10474:1991 or an Inspection Certificate 3.1 in accordance with EN 10204:2004. Alternatively, if specified in the purchase order, an Inspection Certificate 3.1.A or 3.1.C in accordance with ISO 10474:1991 or an Inspection Certificate 3.2 in accordance with EN 10204:2004 shall be issued.

10.1.3.2 The following information, as applicable, shall be provided for each order item:

a) specified outside diameter, specified wall thickness, pipe grade, PSL, type of pipe, and the delivery condition;

b) chemical composition (heat and product) and carbon equivalent (product analysis and acceptance criterion);

c) tensile test results and the type, size, location, and orientation of the test pieces;

d) CVN impact test results; the size, orientation, and location of the test pieces; the test temperature; and the acceptance criteria for the specific test piece sizes used;

e) for welded pipe, DWT test results (individual and average test results for each test);

f) specified minimum hydrostatic test pressure and specified test duration;

g) for welded pipe, the method of nondestructive weld inspection (radiological, ultrasonic, or electromagnetic) used and the type and size of reference indicator or IQI used;

h) for SMLS pipe, the method of nondestructive inspection (ultrasonic, electromagnetic, or magnetic particle) used and the type and size of the reference indicator used;

i) for HFW pipe, the minimum temperature for heat treatment of the weld seam;

j) for pipe with welded jointer and/or TFL pipe, certification that the product meets the requirements of Annexes M and/or I, as applicable;

k) name and location of facilities used for pipe manufacturing, plate/coil rolling, and steelmaking;

l) results of any supplementary testing specified in the purchase order.

10.2 Specific Inspection

10.2.1 Inspection Frequency

10.2.1.1 For PSL 1 pipe, the inspection frequency shall be as given in Table 17.

10.2.1.2 For PSL 2 pipe, the inspection frequency shall be as given in Table 18.

Table 17—Inspection Frequency for PSL 1 Pipe

No	Type of Inspection	Type of Pipe	Frequency of Inspection [e]
1	Heat analysis	All pipe	One analysis per heat of steel
2	Product analysis	SMLS, CW, LFW, HFW, LW, SAW, or COW	Two analyses per heat of steel (taken from separate product items)
3	Tensile testing of the pipe body of welded pipe with $D \leq 48.3$ mm (1.900 in.), in Grade L175 or A25	CW, LFW, or HFW	Once per test unit [e] of not more than 25 tonnes (28 tons) of pipe
4	Tensile testing of the pipe body of welded pipe with $D \leq 48.3$ mm (1.900 in.), in Grade L175P or A25P	CW	Once per test unit [e] of not more than 25 tonnes (28 tons) of pipe
5	Tensile testing of the pipe body of welded pipe with $D > 48.3$ mm (1.900 in.), in Grade L175 or A25	CW, LFW, or HFW	Once per test unit of not more than 50 tonnes (55 tons) of pipe
6	Tensile testing of the pipe body of welded pipe with $D > 48.3$ mm (1.900 in.), in Grade L175P or A25P	CW	Once per test unit of not more than 50 tonnes (55 tons) of pipe
7	Tensile testing of the pipe body of seamless pipe	SMLS	Once per test unit of pipe with the same cold-expansion ratio [a]
8	Tensile testing of the pipe body of welded pipe in grades higher than Grade L175 or A25	LFW, HFW, LW, SAW, or COW	Once per test unit of pipe with the same cold-expansion ratio [a]
9	Tensile testing of the longitudinal or helical seam weld of welded pipe with $D \geq 219.1$ mm (8.625 in.)	LFW, HFW, LW, SAW, or COW	Once per test unit of pipe with the same cold-expansion ratio [a,b,c]
10	Tensile testing of the coil/plate end weld of welded pipe with $D \geq 219.1$ mm (8.625 in.)	SAWH or COWH	At least once per 50 coil/plate end welds from pipe with the same cold-expansion ratio [a,c,d]
11	Bend testing of the longitudinal seam weld of welded pipe with $D \leq 48.3$ mm (1.900 in.), in Grade L175, L175P, A25, or A25P	CW, LFW, or HFW	Once per test unit of not more than 25 tonnes (28 tons) of pipe
12	Bend testing of the longitudinal seam weld of welded pipe with 48.3 mm (1.900 in.) $< D \leq 60.3$ mm (2.375 in.), in Grade L175, L175P, A25, or A25P	CW, LFW, or HFW	Once per test unit of not more than 50 tonnes (55 tons) of pipe
13	Guided-bend testing of the longitudinal or helical seam weld of welded pipe	SAW or COW	Once per test unit of not more than 50 lengths of pipe of the same grade
14	Guided-bend testing of the coil/plate end weld of welded pipe	SAWH or COWH	At least once per 50 coil/plate end welds from pipe with the same cold expansion ratio [a,c,d]
15	Guided-bend testing of the longitudinal seam weld of welded pipe with $D \geq 323.9$ mm (12.750 in.)	LW	Once per test unit of not more than 50 lengths of pipe of the same grade
16	Flattening test of welded pipe	CW, LFW, HFW, or LW	As shown in Figure 6
17	Hardness testing of hard spots in cold-formed welded pipe	LFW, HFW, LW, SAW, or COW	Any hard spot exceeding 50 mm (2.0 in.) in any direction
18	Hydrostatic testing	SMLS, CW, LFW, HFW, LW, SAW, or COW	Each pipe
19	Macrographic testing of the longitudinal or helical seam weld of welded pipe	SAW or COW	At least once per operating shift plus whenever any change of pipe size occurs during the operating shift; or, if 10.2.5.2 applies, at the beginning of the production of each combination of specified outside diameter and specified wall thickness
20	Metallographic testing of the longitudinal seam weld of welded pipe	LFW or HFW excluding full-body normalized pipe	At least once per operating shift plus whenever changes of grade, specified outside diameter or specified wall thickness are made; plus whenever excursions from operating heat treatment conditions are encountered
21	Visual inspection	SMLS, CW, LFW, HFW, LW, SAW, or COW	Each pipe, except as allowed by 10.2.7.2
22	Pipe diameter and out-of-roundness	SMLS, CW, LFW, HFW, LW, SAW, or COW	At least once per 4 h per operating shift plus whenever any change of pipe size occurs during the operating shift
23	Wall thickness measurement	All pipe	Each pipe (see 10.2.8.5)
24	Other dimensional testing	SMLS, CW, LFW, HFW, LW, SAW, or COW	Random testing, with the details left to the discretion of the manufacturer
25	Weighing of pipe with $D <$ 141.3 mm (5.563 in.)	SMLS, CW, LFW, HFW, LW, SAW, or COW	Each pipe or each convenient group of pipe, with the choice being at the discretion of the manufacturer
26	Weighing of pipe with $D \geq$ 141.3 mm (5.563 in.)	SMLS, CW, LFW, HFW, LW, SAW, or COW	Each pipe
27	Length	SMLS, CW, LFW, HFW, LW, SAW, or COW	Each length of pipe shall be measured, except that pipe made in lengths that are uniform within 30 mm (0.1 ft) need not be individually measured, provided the accuracy of the length is verified at least once per 4 h per operating shift
28	Nondestructive inspection	SMLS, CW, LFW, HFW, LW, SAW, or COW	In accordance with Annex E

[a] The cold-expansion ratio (if applicable) is designated by the manufacturer and is derived using the designated before-expansion outside diameter or circumference and the after-expansion outside diameter or circumference; an increase or decrease in the cold-expansion ratio of more than 0.002 requires the creation of a new test unit.

[b] For double-seam pipe, both longitudinal weld seams in the pipe selected to represent the test unit shall be tested.

[c] Pipe produced by each welding machine shall be tested at least once per week.

[d] Applies only to finished helical seam pipe containing coil/plate end welds.

[e] "Test unit" is as defined in 3.1.60.

Table 18—Inspection Frequency for PSL 2 Pipe

No	Type of Inspection	Type of Pipe	Frequency of Inspection [e]
1	Heat analysis	All pipe	One analysis per heat of steel
2	Product analysis	SMLS, HFW, SAW, or COW	Two analyses per heat of steel (taken from separate product items)
3	Tensile testing of the pipe body $D \leq 141.3$ mm (5.563 in.)	SMLS, HFW, SAW, or COW	Once per test unit of not more than 400 pipes with the same cold-expansion ratio [a]
4	Tensile testing of the pipe body $D >$141.3mm (5.563in.) and ≤ 323.9 mm (12.750 in.)	SMLS, HFW, SAW, or COW	Once per test unit of not more than 200 pipes with the same cold-expansion ratio [a]
5	Tensile testing of the pipe body $D >$ 323.9 mm (12.750 in.)	SMLS, HFW, SAW, or COW	Once per test unit of not more than 100 pipes with the same cold-expansion ratio [a]
6	Tensile testing of the longitudinal or helical seam weld of welded pipe with $D \geq$ 219.1 mm (8.625 in.) and ≤ 323.9 mm (12.750 in.)	HFW, SAW, or COW	Once per test unit of not more than 200 pipes with the same cold-expansion ratio [a,b,c]
7	Tensile testing of the longitudinal or helical seam weld of welded pipe with $D >$ 323.9 mm (12.750 in.)	HFW, SAW, or COW	Once per test unit of not more than 100 pipes with the same cold-expansion ratio [a,b,c]
8	Tensile testing of the coil/plate end weld of welded pipe with $D \geq$ 219.1 mm (8.625 in.)	SAWH or COWH	At least once per 50 coil/plate end welds from pipe with the same cold-expansion ratio [a,b,d]
9	CVN impact testing of the pipe body of pipe with specified outside diameter and specified wall thickness as given in Table 22	SMLS, HFW, SAW, or COW	Once per test unit of pipe with the same cold-expansion ratio [a]
10	If agreed, CVN impact testing of the longitudinal seam weld of welded pipe with specified outside diameter and specified wall thickness as given in Table 22	HFW	Once per test unit of pipe with the same cold-expansion ratio [a,b]
11	CVN impact testing of the longitudinal or helical seam weld of welded pipe with specified outside diameter and specified wall thickness as given in Table 22	SAW or COW	Once per test unit of pipe with the same cold-expansion ratio [a,b,c]
12	CVN impact testing of the coil/plate end weld of welded pipe with specified outside diameter and specified wall thickness as given in Table 22	SAWH or COWH	At least once per 50 coil/plate end welds from pipe with the same cold-expansion ratio [a,b,d]
13	If agreed, DWT testing of the pipe body of welded pipe with $D \geq$ 508 mm (20.000 in.)	HFW, SAW, or COW	Once per test unit of pipe with the same cold-expansion ratio [a]
14	Guided-bend testing of the longitudinal or helical seam weld of welded pipe	SAW or COW	Once per test unit of not more than 50 lengths of pipe with the same cold-expansion ratio [a]
15	Guided-bend testing of the coil/plate end weld of welded pipe	SAWH or COWH	At least once per 50 coil/plate end welds from pipe with the same cold-expansion ratio [a,b,d]
16	Flattening test of welded pipe	HFW	As shown in Figure 6
17	Hardness testing of hard spots in cold-formed welded pipe	HFW, SAW, or COW	Any hard spot exceeding 50 mm (2.0 in.) in any direction
18	Hydrostatic testing	SMLS, HFW, SAW, or COW	Each pipe
19	Macrographic testing of the longitudinal or helical seam weld of welded pipe	SAW or COW	At least once per operating shift plus whenever any change of pipe size occurs during the operating shift; or, if 10.2.5.3 or 10.2.5.4 applies, at the beginning of the production of each combination of specified outside diameter and specified wall thickness
20	Metallographic testing (or optional hardness test in lieu of metallography) of the longitudinal seam weld of welded pipe	HFW excluding full-body normalized pipe	At least once per operating shift plus whenever changes of grade, specified outside diameter or specified wall thickness are made; plus whenever excursions from operating heat treatment conditions are encountered
21	Visual inspection	SMLS, HFW, SAW, or COW	Each pipe, except as allowed by 10.2.7.2
22	Pipe diameter and out-of-roundness	SMLS, HFW, SAW, or COW	At least once per 4 h per operating shift plus whenever any change of pipe size occurs during the operating shift
23	Wall thickness measurement	All pipe	Each pipe (see 10.2.8.5)
24	Other dimensional testing	SMLS, HFW, SAW, or COW	Random testing, with the details left to the discretion of the manufacturer
25	Weighing of pipe with $D <$ 141.3 mm (5.563 in.)	SMLS, HFW, SAW, or COW	Each pipe or each convenient group of pipe, with the choice being at the discretion of the manufacturer
26	Weighing of pipe with $D \geq$ 141.3 mm (5.563 in.)	SMLS, HFW, SAW, or COW	Each pipe
27	Length	SMLS, HFW, SAW, or COW	Each length of pipe shall be measured, except that pipe made in lengths that are uniform within 30 mm (0.1 ft) need not be individually measured, provided the accuracy of the length is verified at least once per 4 h per operating shift
28	Nondestructive inspection	SMLS, HFW, SAW, or COW	In accordance with Annex E

[a] The cold-expansion ratio (if applicable) is designated by the manufacturer and is derived using the designated before-expansion outside diameter or circumference and the after-expansion outside diameter or circumference; an increase or decrease in the cold-expansion ratio of more than 0.002 requires the creation of a new test unit.

[b] Pipe produced by each welding machine shall be tested at least once per week.

[c] For double-seam pipe, both longitudinal weld seams in the pipe selected to represent the test unit shall be tested.

[d] Applies only to finished helical seam pipe containing coil/plate end welds.

[e] "Test unit" is as defined in 3.1.60.

10.2.2 Samples and Test Pieces for Product Analysis

Samples shall be taken, and test pieces prepared, in accordance with ISO 14284 or ASTM E1806. Such samples shall be taken from the pipe, plate, or coil.

10.2.3 Samples and Test Pieces for Mechanical Tests

10.2.3.1 General

For tensile tests, CVN impact tests, DWT tests, bend tests, guided-bend tests, and flattening tests, the samples shall be taken and the corresponding test pieces prepared, in accordance with the applicable reference standard.

Samples and test pieces for the various test types shall be taken from locations as shown in Figure 5 and Figure 6 and as given in Table 19 or Table 20, whichever is applicable, taking into account the supplementary details in 10.2.3.2 to 10.2.3.7 and in 10.2.4.

For any of the mechanical tests specified in Section 9, any test piece that shows defective preparation or material imperfections unrelated to the intent of the particular mechanical test, whether observed before or after testing, may be discarded and replaced by another test piece from the same length of pipe.

10.2.3.2 Test Pieces for the Tensile Test

Rectangular test pieces, representing the full wall thickness of the pipe, shall be taken in accordance with ISO 6892-1 or ASTM A370 and as shown in Figure 5. A standard sampling location along the coil or plate length shall be selected according to a documented practice.

For hot worked and heat-treated seamless pipe, transverse test pieces shall have a round cross-section and shall be obtained from nonflattened samples.

For other pipe, transverse test pieces shall either have a rectangular or round cross-section. Rectangular cross-section test pieces shall be from flattened samples, whereas round cross-section test shall be from nonflattened samples.

Flattening of test pieces shall be carried out according to documented procedures.

For transverse tensile tests using round cross-section test pieces, the diameter of such test pieces shall be as given in Table 21, except that the next larger diameter may be used at the option of the manufacturer. For longitudinal tensile tests of pipe with $t \geq 19.0$ mm (0.748 in.), such test pieces shall be 12.7 mm (0.500 in.) in diameter.

For testing pipe with $D < 219.1$ mm (8.625 in.), full-section longitudinal test pieces may be used at the option of the manufacturer.

If agreed, ring expansion test pieces may be used for the determination of transverse yield strength.

Weld beads may be ground flush, and local imperfections may be removed.

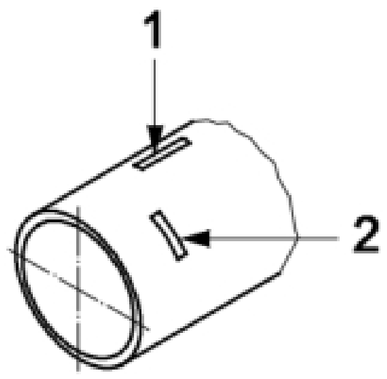

Key
1 L—longitudinal sample
2 T—transverse sample

a) SMLS pipe

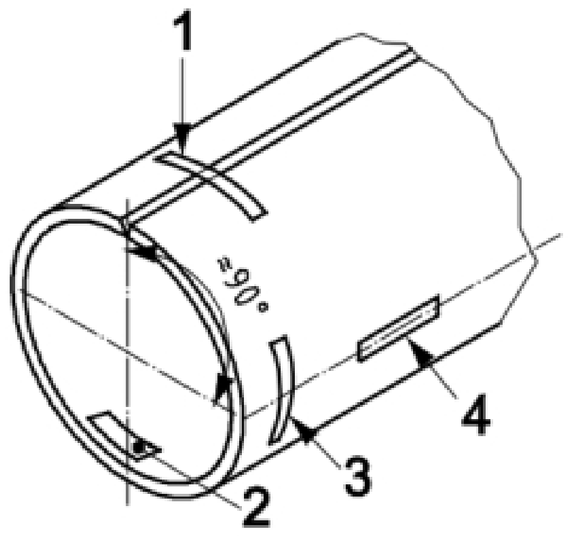

Key
1 W—transverse weld sample, centered on the weld
2 T180—transverse sample, centered ≈ 180° from the longitudinal weld
3 T90—transverse sample, centered ≈ 90° from the longitudinal weld
4 L90—longitudinal sample, centered ≈ 90° from the longitudinal weld

b) CW, LFW, HFW, LW, SAWL, and COWL pipe

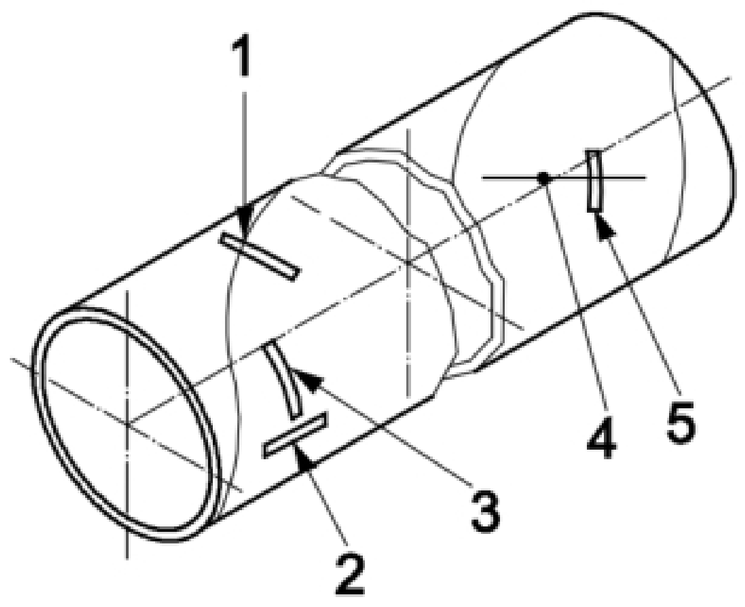

Key
1 W—transverse weld sample, centered on the helical seam weld
2 L—longitudinal sample, centered at least $a/4$ in the longitudinal direction from the helical seam weld
3 T— transverse sample, centered at least $a/4$ in the longitudinal direction from the helical seam weld
4 coil/plate end weld, where length a is the width of the coil/plate
5 WS—transverse weld sample, centered at least $a/4$ from the junctions of the helical seam weld and the coil/plate end weld

c) SAWH and COWH pipe

Figure 5—Sample and Test Piece Orientation and Locations

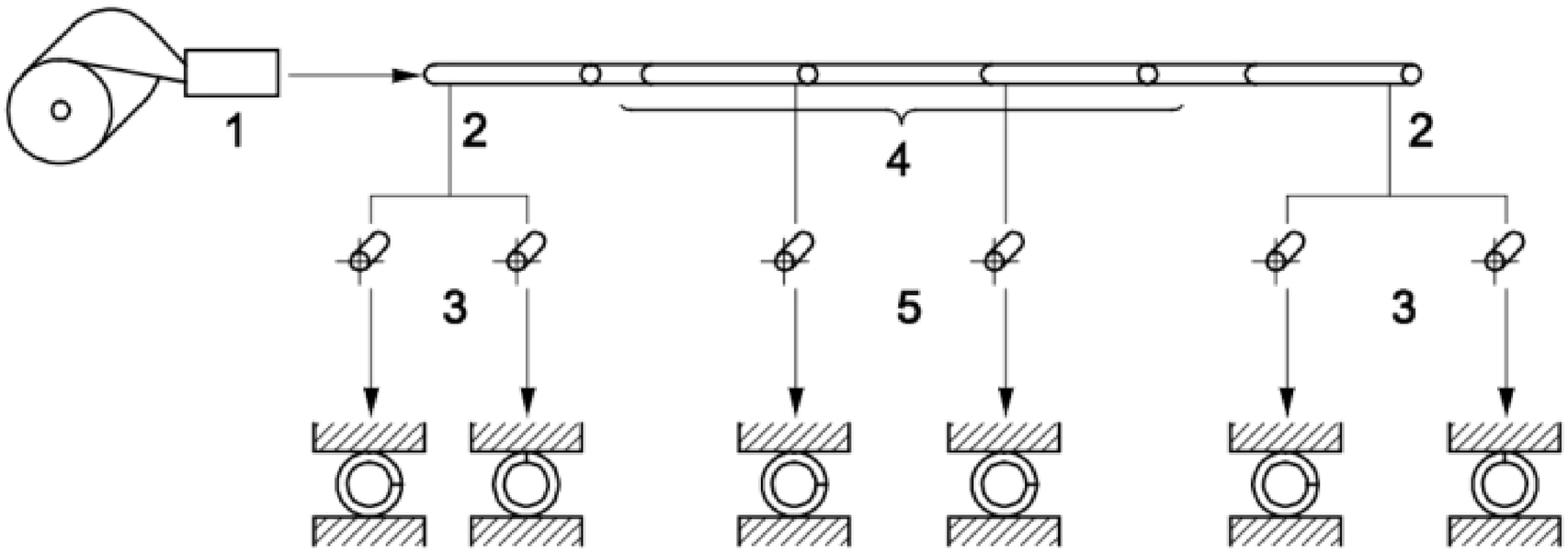

Key

1 welding
2 coil end
3 two test pieces from each coil end
4 weld stop
5 two test pieces, one from each side of the weld stop

a) EW pipe in grades ≥ L245 or B and LW with D < 323.9 mm (12.750 in.)—Nonexpanded, produced in multiple lengths

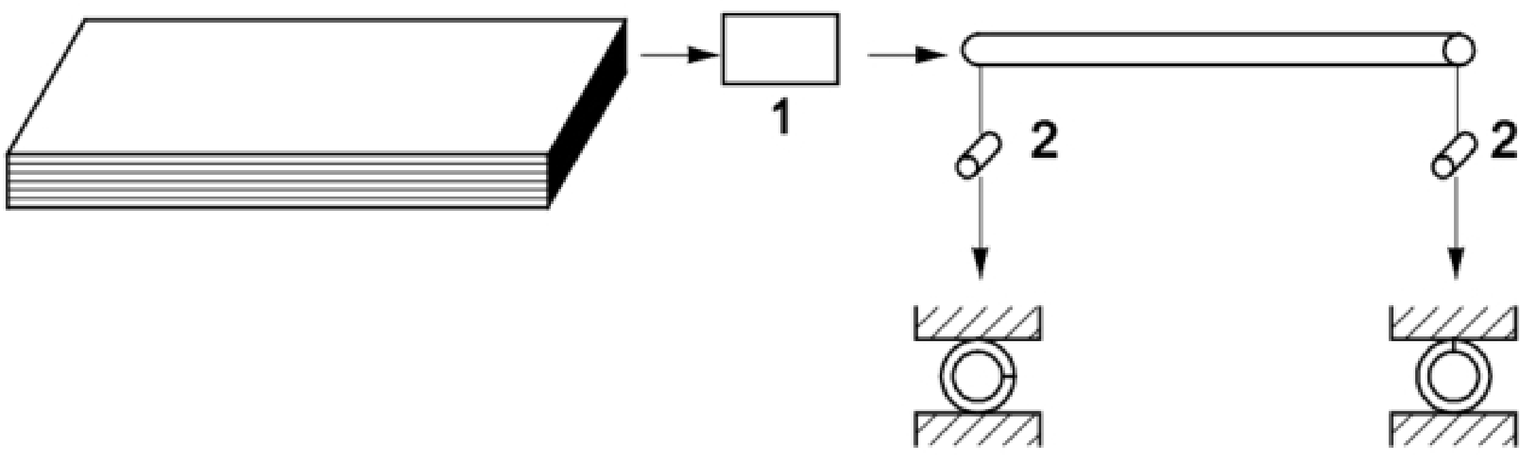

Key

1 welding
2 two test pieces, one from each pipe end

b) EW pipe in grades ≥ L245 or B—Nonexpanded, produced in single lengths

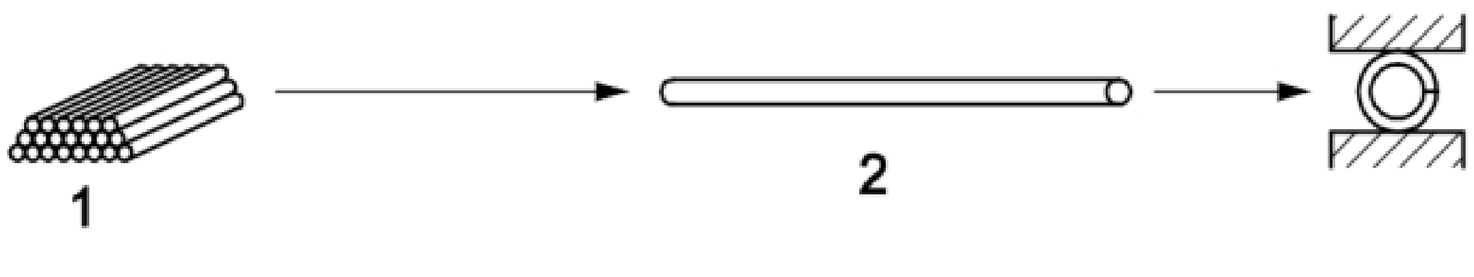

Key

1 test unit of ≤ 50 tonnes (55 tons) of pipe
2 one test piece, from one pipe end

c) CW pipe or EW pipe in grades L175, L175P, A 25, or A 25P with D ≥ 73.0 mm (2.875 in.)

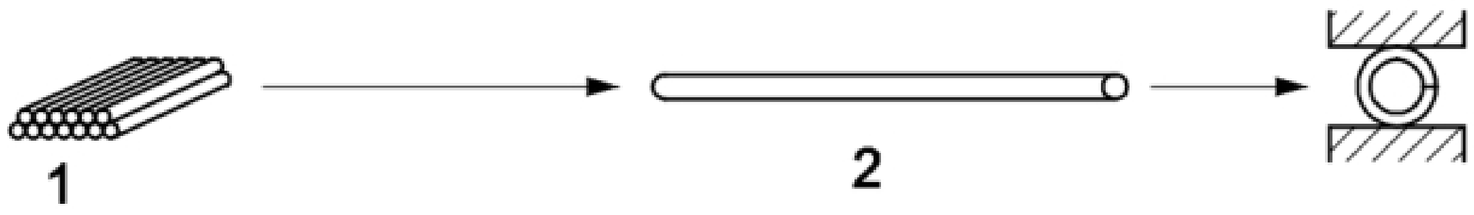

Key

1 test unit of ≤ 100 lengths of pipe
2 one test piece, from one pipe end

d) EW pipe in grades ≥ L245 or B and LW pipe with D < 323.9 mm (12.750 in.)—Cold-expanded

Figure 6—Flattening Tests

Table 19—Number, Orientation, and Location of Test Pieces per Sample for Mechanical Tests for PSL 1 Pipe

Type of Pipe	Sample Location	Type of Test	Number, Orientation, and Location of Test Pieces per Sample [a]			
			Specified Outside Diameter D mm (in.)			
			< 219.1 (8.625)	219.1 (8.625) to < 323.9 (12.750)	323.9 (12.750) to < 508 (20.000)	≥ 508 (20.000)
SMLS, not cold-expanded [see Figure 5 a)]	Pipe body	Tensile	1L [b]	1L	1L	1L
SMLS, cold-expanded [see Figure 5 a)]	Pipe body	Tensile	1L [b]	1T [c]	1T [c]	1T [c]
CW [see Figure 5 b)]	Pipe body	Tensile	1L90 [b]	—	—	—
	Pipe body and weld	Bend	1 [e]	—	—	—
	Pipe body and weld	Flattening	As shown in Figure 6			
LW [see Figure 5 b)]	Pipe body	Tensile	1L90 [b]	1T180 [c]	1T180 [c]	1T180 [c]
	Seam weld	Tensile	—	1W	1W	1W
	Seam weld	Guided-bend	—	—	2W	2W
	Pipe body and weld	Flattening	As shown in Figure 6			
LFW or HFW [see Figure 5 b)]	Pipe body	Tensile	1L90 [b]	1T180 [c]	1T180 [c]	1T180 [c]
	Seam weld	Tensile	—	1W	1W	1W
	Pipe body and weld	Bend	1 [e]	—	—	—
	Pipe body and weld	Flattening	As shown in Figure 6			
SAWL or COWL [see Figure 5 b)]	Pipe body	Tensile	1L90 [b]	1T180 [c]	1T180 [c]	1T180 [c]
	Seam weld	Tensile	—	1W	1W	1W [d]
	Seam weld	Guided-bend	2W	2W	2W	2W [d]
SAWH or COWH [see Figure 5 c)]	Pipe body	Tensile	1L [b]	1T [c]	1T [c]	1T [c]
	Seam weld	Tensile	—	1W	1W	1W
	Seam weld	Guided-bend	2W	2W	2W	2W
	Coil/plate end weld	Guided-bend	2WS	2WS	2WS	2WS

[a] See Figure 5 for an explanation of the symbols used to designate orientation and location of samples and test pieces.

[b] Full-section longitudinal test pieces may be used at the option of the manufacturer.

[c] If agreed, annular test pieces may be used for the determination of transverse yield strength by the hydraulic ring expansion test in accordance with ASTM A370.

[d] For double-seam pipe, both longitudinal weld seams in the pipe selected to represent the test unit shall be tested.

[e] Testing limited to pipe of $D \leq 60.3$ mm (2.375 in.).

Table 20—Number, Orientation, and Location of Test Pieces per Sample for Mechanical Tests for PSL 2 Pipe

Type of Pipe	Sample Location	Type of Test	Number, Orientation, and Location of Test Pieces per Sample [a]			
			Specified Outside Diameter D mm (in.)			
			< 219.1 (8.625)	219.1 (8.625) to < 323.9 (12.750)	323.9 (12.750) to < 508 (20.000)	≥ 508 (20.000)
SMLS, not cold-expanded [see Figure 5 a)]	Pipe body	Tensile	1L [b]	1L [c,d]	1L [c,d]	1L [c,d]
		CVN	3T	3T	3T	3T
SMLS, cold-expanded [see Figure 5 a)]	Pipe body	Tensile	1L [b]	1T [d]	1T [d]	1T [d]
		CVN	3T	3T	3T	3T
HFW [see Figure 5 b)]	Pipe body	Tensile	1L90 [b]	1T180 [d]	1T180 [d]	1T180 [d]
		CVN	3T90	3T90	3T90	3T90
		DWT	—	—	—	2T90
	Seam weld	Tensile	—	1W	1W	1W
		CVN	3W	3W	3W	3W
	Pipe body and weld	Flattening	As shown in Figure 6			
SAWL or COWL [see Figure 5 b)]	Pipe body	Tensile	1L90 [b]	1T180 [d]	1T180 [d]	1T180 [d]
		CVN	3T90	3T90	3T90	3T90
		DWT	—	—	—	2T90
	Seam weld	Tensile	—	1W	1W	1W [e]
		CVN	3W and 3HAZ	3W and 3HAZ	3W and 3HAZ	3W [e] and 3HAZ [e]
		Guided-bend	2W [f]	2W [f]	2W [f]	2W [e,f]
SAWH or COWH [see Figure 5 c)]	Pipe body	Tensile	1L [b]	1T [d]	1T [d]	1T [d]
		CVN	3T	3T	3T	3T
		DWT	—	—	—	2T
	Seam weld	Tensile	—	1W	1W	1W
		CVN	3W and 3HAZ	3W and 3HAZ	3W and 3HAZ	3W and 3HAZ
		Guided-bend	2W [f]	2W [f]	2W [f]	2W [f]
	Coil/plate end weld	Tensile	—	1WS	1WS	1WS
		CVN	3WS and 3HAZ	3WS and 3HAZ	3WS and 3HAZ	3WS and 3HAZ
		Guided-bend	2WS [f]	2WS [f]	2WS [f]	2WS [f]

[a] See Figure 5 for an explanation of the symbols used to designate orientation and location.

[b] Full-section longitudinal test pieces may be used at the option of the manufacturer.

[c] If agreed, transverse test pieces may be used.

[d] If agreed, annular test pieces may be used for the determination of transverse yield strength by the hydraulic ring expansion test in accordance with ASTM A370.

[e] For double-seam pipe, both longitudinal-weld seams in the pipe selected to represent the test unit shall be tested.

[f] For pipe with $t > 19.0$ mm (0.748 in.), the test pieces may be machined to provide a rectangular cross-section having a thickness of 18.0 mm (0.709 in.).

Table 21—Relationship between Pipe Dimensions and Round Bar Test Piece Diameter for Transverse Tensile Tests

Specified Outside Diameter *D* mm (in.)	Specified Wall Thickness *t* mm (in.)		
	Specified Diameter of Test Piece within the Gauge Length mm (in.)		
	12.7 (0.500)	**8.9 (0.350)**	**6.4 (0.250) [a]**
219.1 (8.625) to < 273.1 (10.750)	—	≥ 28.1 (1.106)	< 28.1 (1.106)
273.1 (10.750) to < 323.9 (12.750)	≥ 36.1 (1.421)	25.5 (1.004) to < 36.1 (1.421)	< 25.5 (1.004)
323.9 (12.750) to < 355.6 (14.000)	≥ 33.5 (1.319)	23.9 (0.941) to < 33.5 (1.319)	< 23.9 (0.941)
355.6 (14.000) to < 406.4 (16.000)	≥ 32.3 (1.272)	23.2 (0.913) to < 32.3 (1.272)	< 23.2 (0.913)
406.4 (16.000) to < 457 (18.000)	≥ 30.9 (1.217)	22.2 (0.874) to < 30.9 (1.217)	< 22.2 (0.874)
457 (18.000) to < 508 (20.000)	≥ 29.7 (1.169)	21.5 (0.846) to < 29.7 (1.169)	< 21.5 (0.846)
508 (20.000) to < 559 (22.000)	≥ 28.8 (1.134)	21.0 (0.827) to < 28.8 (1.134)	< 21.0 (0.827)
559 (22.000) to < 610 (24.000)	≥ 28.1 (1.106)	20.5 (0.807) to < 28.1 (1.106)	< 20.5 (0.807)
610 (24.000) to < 660 (26.000)	≥ 27.5 (1.083)	20.1 (0.791) to < 27.5 (1.083)	< 20.1 (0.791)
660 (26.000) to < 711 (28.000)	≥ 27.0 (1.063)	19.8 (0.780) to < 27.0 (1.063)	< 19.8 (0.780)
711 (28.000) to < 762 (30.000)	≥ 26.5 (1.043)	19.5 (0.768) to < 26.5 (1.043)	< 19.5 (0.768)
762 (30.000) to < 813 (32.000)	≥ 26.2 (1.031)	19.3 (0.760) to < 26.2 (1.031)	< 19.3 (0.760)
813 (32.000) to < 864 (34.000)	≥ 25.8 (1.016)	19.1 (0.753) to < 25.8 (1.016)	< 19.1 (0.753)
864 (34.000) to < 914 (36.000)	≥ 25.5 (1.004)	18.9 (0.744) to < 25.5 (1.004)	< 18.9 (0.744)
914 (36.000) to < 965 (38.000)	≥ 25.3 (0.996)	18.7 (0.736) to < 25.3 (0.996)	< 18.7 (0.736)
965 (38.000) to < 1016 (40.000)	≥ 25.1 (0.988)	18.6 (0.732) to < 25.1 (0.988)	< 18.6 (0.732)
1016 (40.000) to < 1067 (42.000)	≥ 24.9 (0.980)	18.5 (0.728) to < 24.9 (0.980)	< 18.5 (0.728)
1067 (42.000) to < 1118 (44.000)	≥ 24.7 (0.972)	18.3 (0.720) to < 24.7 (0.972)	< 18.3 (0.720)
1118 (44.000) to < 1168 (46.000)	≥ 24.5 (0.965)	18.2 (0.717) to < 24.5 (0.965)	< 18.2 (0.717)
1168 (46.000) to < 1219 (48.000)	≥ 24.4 (0.961)	18.1 (0.713) to < 24.4 (0.961)	< 18.1 (0.713)
1219 (48.000) to < 1321 (52.000)	≥ 24.2 (0.953)	18.1 (0.713) to < 24.2 (0.953)	< 18.1 (0.713)
1321 (52.000) to < 1422 (56.000)	≥ 24.0 (0.945)	17.9 (0.705) to < 24.0 (0.945)	< 17.9 (0.705)
1422 (56.000) to < 1524 (60.000)	≥ 23.8 (0.937)	17.8 (0.701) to < 23.8 (0.937)	< 17.8 (0.701)
1524 (60.000) to < 1626 (64.000)	≥ 23.6 (0.929)	17.6 (0.693) to < 23.6 (0.929)	< 17.6 (0.693)
1626 (64.000) to < 1727 (68.000)	≥ 23.4 (0.921)	17.5 (0.689) to < 23.4 (0.921)	< 17.5 (0.689)
1727 (68.000) to < 1829 (72.000)	≥ 23.3 (0.917)	17.4 (0.685) to < 23.3 (0.917)	< 17.4 (0.685)
1829 (72.000) to < 1930 (76.000)	≥ 23.1 (0.909)	17.4 (0.685) to < 23.1 (0.909)	< 17.4 (0.685)
1930 (76.000) to < 2134 (84.000)	≥ 23.0 (0.906)	17.3 (0.681) to < 23.0 (0.906)	< 17.3 (0.681)
≥ 2134 (84.000)	≥ 22.9 (0.902)	17.2 (0.677) to < 22.9 (0.902)	< 17.2 (0.677)

[a] For pipe sizes too small to obtain 6.4 mm (0.250 in.) diameter test pieces, round bar tensile test pieces shall not be used.

10.2.3.3 Test Pieces for the CVN Impact Test

The test pieces shall be prepared in accordance with ASTM A370 unless ISO 148-1 and the required striker radius (either 2 mm or 8 mm) are specified in the purchase order. The axis of the notch shall be perpendicular to the pipe surface.

For pipe weld and HAZ tests, each test piece shall be etched prior to notching in order to enable proper placement of the notch.

For test pieces taken in the weld of SAW and COW pipe, the axis of the notch shall be located on, or as close as practicable to, the centerline of the outside weld bead as shown in Figure 7. The specimen shall be taken as close as practicable to the OD surface of the pipe.

For test pieces taken in the HAZ of SAW and COW pipe, the axis of the notch shall be located as close as practicable to the fusion line of the outside weld bead as shown in Figure 7. The specimen shall be taken as close as practicable to the OD surface of the pipe.

For test pieces taken in the weld of HFW pipe, the axis of the notch shall be located on, or as close as practicable to, the weld line.

The size, orientation, and source of the test pieces shall be as given in Table 22, except that the next smaller test piece size may be used if the absorbed energy is expected to exceed 80 % of the full-scale capacity of the impact testing machine.

NOTE It is not necessary to CVN impact test combinations of specified outside diameter and specified wall thickness not covered by Table 22.

10.2.3.4 Test Pieces for the DWT Test

The test pieces shall be prepared in accordance with API 5L3.

10.2.3.5 Test Pieces for the (Full Section) Bend Test

The test pieces shall be prepared in accordance with ISO 8491 or ASTM A370.

10.2.3.6 Test Pieces for the Guided-bend Test

The test pieces shall be prepared in accordance with ISO 5173 or ASTM A370 and Figure 8.

For pipe with t > 19.0 mm (0.748 in.), the test pieces may be machined to provide a rectangular cross-section having a thickness of 18.0 mm (0.709 in.). For pipe with $t \leq$ 19.0 mm (0.748 in.), the test pieces shall be full wall thickness curved-section test pieces.

For SAW and COW pipe, the weld reinforcement shall be removed from both faces.

10.2.3.7 Test Pieces for the Flattening Test

The test pieces shall be taken in accordance with ISO 8492 or ASTM A370, except that the length of each test piece shall be ≥ 60 mm (2.5 in.).

Minor surface imperfections may be removed by grinding.

a) HAZ specimen

b) Weld specimen

Key

1 material sampled by Charpy test piece notch in HAZ of seam weld—close to fusion line

2 centerline of Charpy test piece notch

3 material sampled by Charpy test piece notch in weld seam—on or close to centerline of the outside weld bead

Figure 7—Location of Charpy Test Specimens

Table 22—Relationship between Pipe Dimensions and Required Impact Test Piece for PSL 2 Pipe

Specified Outside Diameter D mm (in.)	Specified Wall Thickness t mm (in.)			
	CVN Test Piece Size, Source, and Orientation			
	Full [a]	¾ [a]	⅔ [a]	½ [a]
114.3 (4.500) to < 141.3 (5.563)	≥ 12.6 (0.495)	11.3 (0.445) to < 12.6 (0.495)	10.9 (0.429) to < 11.3 (0.445)	10.1 (0.396) to < 10.9 (0.429)
141.3 (5.563) to < 168.3 (6.625)	≥ 11.9 (0.469)	9.8 (0.387) to < 11.9 (0.469)	9.4 (0.370) to < 9.8 (0.387)	8.6 (0.338) to < 9.4 (0.370)
168.3 (6.625) to < 219.1 (8.625)	≥ 11.7 (0.460)	9.2 (0.361) to < 11.7 (0.460)	8.5 (0.333) to < 9.2 (0.361)	7.6 (0.301) to < 8.6 (0.333)
219.1 (8.625) to < 273.1 (10.750)	≥ 11.4 (0.449)	8.9 (0.350) to < 11.4 (0.449)	8.1 (0.317) to < 8.9 (0.350)	6.5 (0.257) to < 8.1 (0.317)
273.1 (10.750) to < 323.9 (12.750)	≥ 11.2 (0.442)	8.7 (0.343) to < 11.2 (0.442)	7.9 (0.310) to < 8.7 (0.343)	6.2 (0.245) to < 7.9 (0.310)
323.9 (12.750) to < 355.6 (14.000)	≥ 11.1 (0.438)	8.6 (0.339) to < 11.1 (0.438)	7.8 (0.306) to < 8.6 (0.339)	6.1 (0.241) to < 7.8 (0.306)
355.6 (14.000) to < 406.4 (16.000)	≥ 11.1 (0.436)	8.6 (0.337) to < 11.1 (0.436)	7.7 (0.304) to < 8.6 (0.337)	6.1 (0.239) to < 7.7 (0.304)
≥ 406.4 (16.000)	≥ 11.0 (0.433)	8.5 (0.334) to < 11.0 (0.433)	7.7 (0.301) to < 8.5 (0.334)	6.0 (0.236) to < 7.7 (0.301)

NOTE 1 The size limits for transverse specimens shown are based on the use of nonflattened, tapered end, test specimens. See P.8.

NOTE 2 For both unit systems, each of the specified wall thickness values is directly calculated (i.e. no conversion between unit systems).

[a] Test pieces, from nonflattened sample, transverse to pipe or weld axis, whichever is applicable.

Dimensions in millimeters (inches)

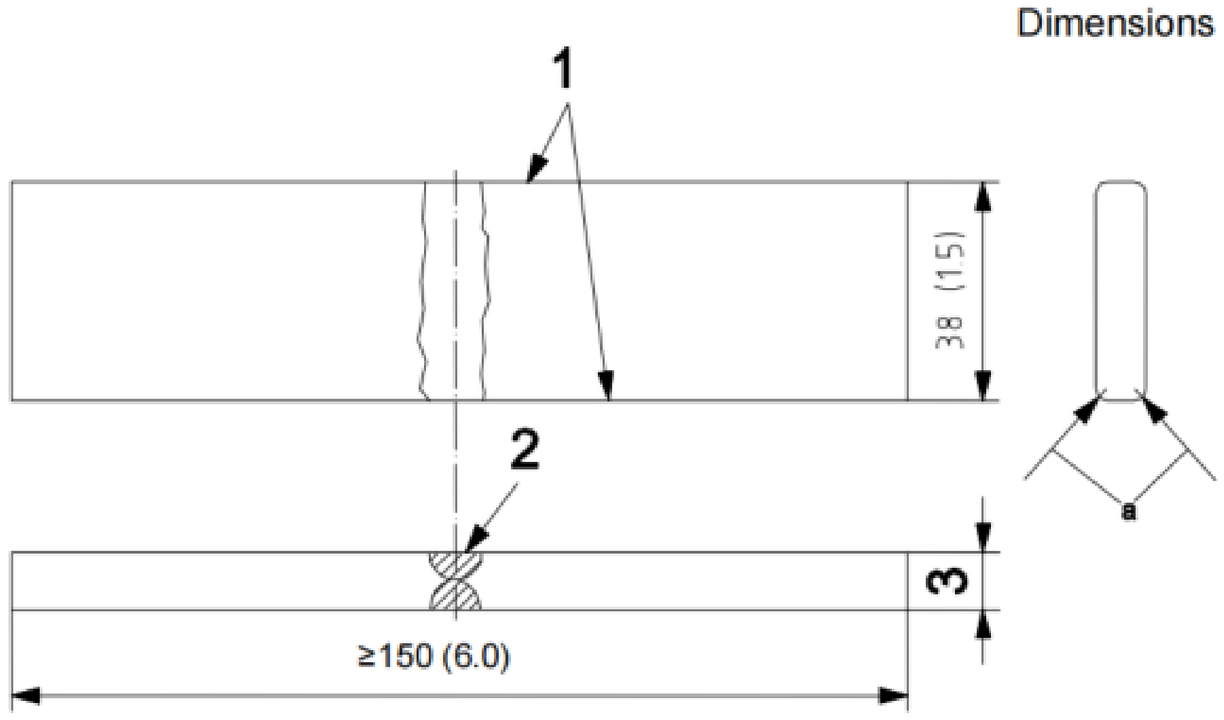

Key

1 long edges machined or oxygen cut, or both
2 weld
3 wall thickness
[a] The radius, r, shall be less than or equal to 1.6 (0.063).

a) SAW and COW pipe

Figure 8—Guided-bend Test Pieces

Dimensions in millimeters (inches)

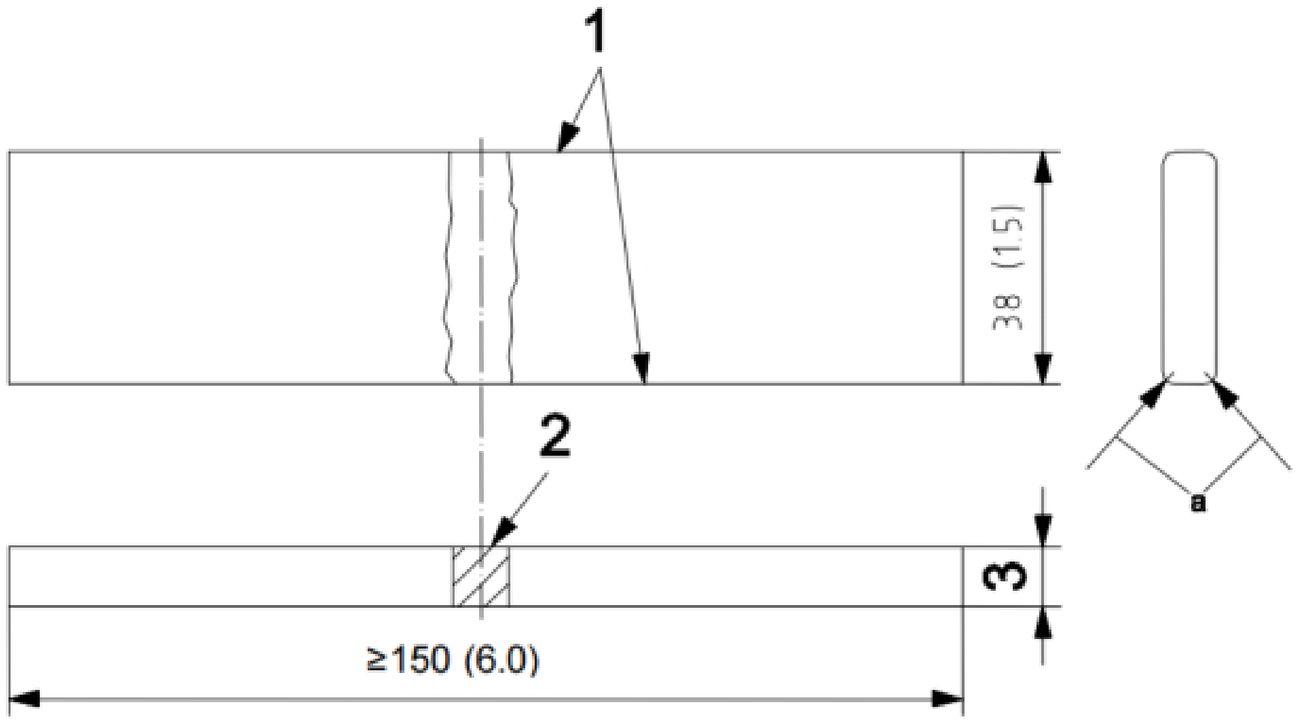

Key
1 long edges machined or oxygen cut, or both
2 weld
3 wall thickness

[a] The radius, r, shall be less than or equal to 1.6 (0.063).

b) LW pipe with $D \geq 323.9$ mm (12.750 in.)

Dimensions in millimeters (inches)

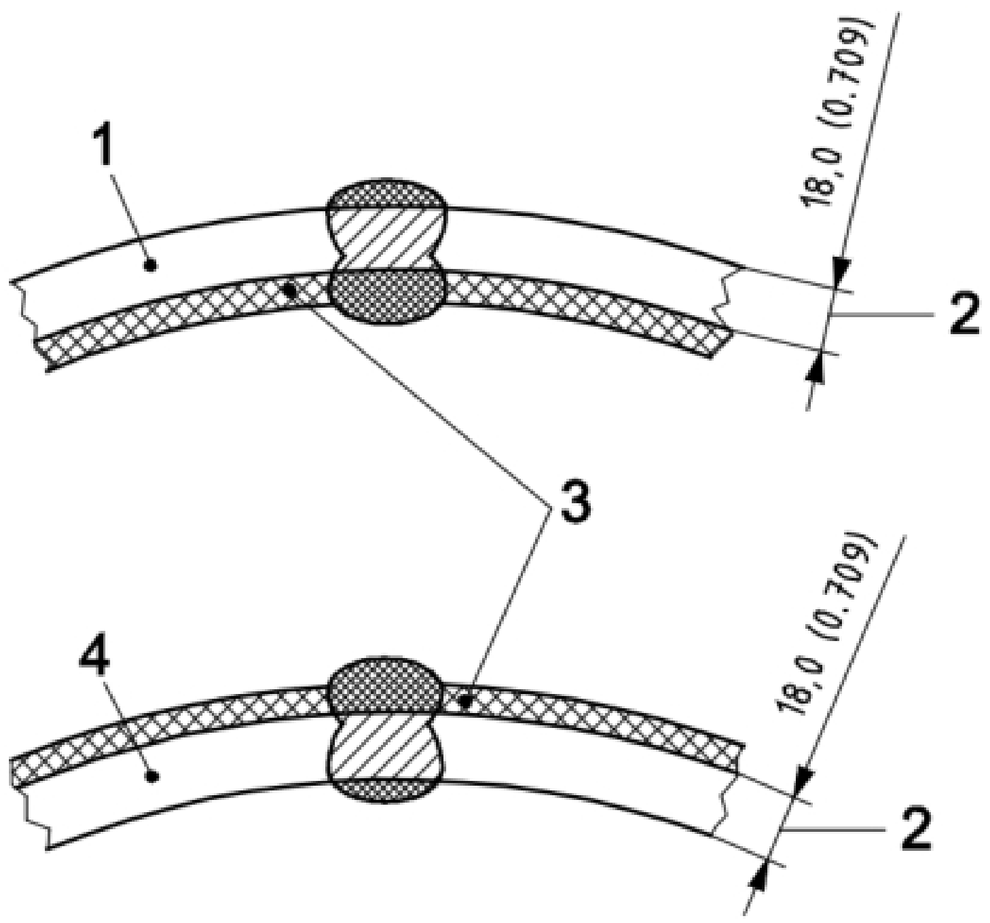

Key
1 face-bend test piece
2 reduced thickness
3 material removed before or after flattening
4 root-bend test piece

Jig dimensions for pipe with t = 19.0 mm (0.748 in.) shall be used.

c) Reduced-thickness test pieces [optional for SAW and COW pipe with t > 19.0 mm (0.748 in.)]

Figure 8—Guided-bend Test Pieces *(continued)*

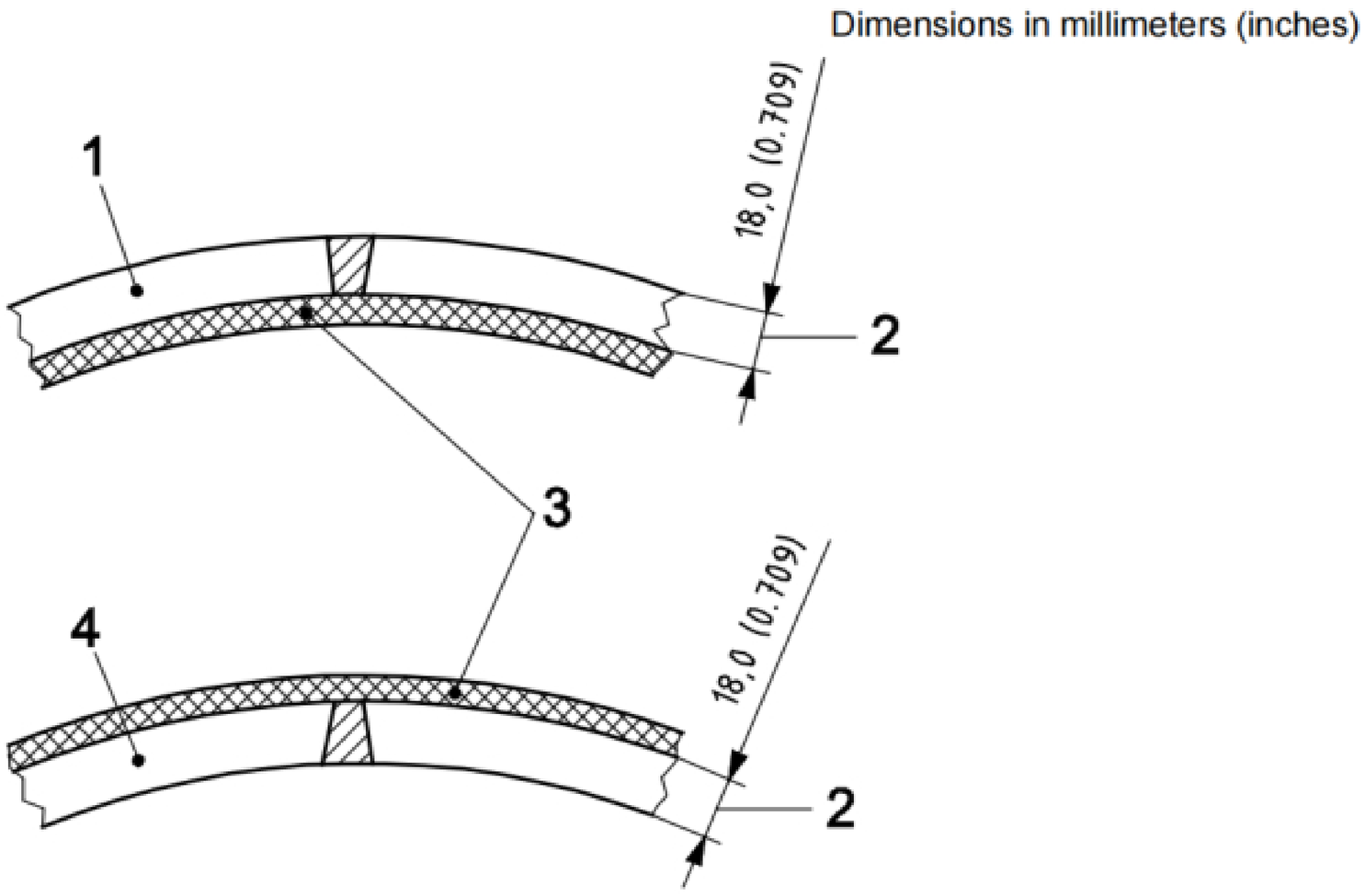

Key
1 face-bend test piece
2 reduced thickness
3 material removed before or after flattening
4 root-bend test piece

Jig dimensions for pipe with t = 19.0 mm (0.748 in.) shall be used.

d) Reduced-thickness test pieces [optional for LW pipe with t > 19.0 mm (0.748 in.)]

Figure 8—Guided-bend Test Pieces *(continued)*

10.2.4 Test Methods

10.2.4.1 Product Analysis

Unless otherwise agreed upon when ordering, the choice of a suitable physical or chemical method of analysis to determine the product analysis is at the discretion of the manufacturer. In cases of dispute, the analysis shall be carried out by a laboratory approved by the two parties. In these cases, the reference method of analysis shall be agreed upon, where possible, with reference to ISO 9769 or ASTM A751.

NOTE ISO 9769 covers a list of available International Standards for chemical analysis, with information on the application and precision of the various methods.

10.2.4.2 Tensile Test

The tensile test shall be carried out in accordance with ISO 6892-1 or ASTM A370.

For pipe body tests, the yield strength, the tensile strength, the yield ratio (as appropriate), and the percentage elongation after fracture shall be determined. For pipe weld tests, the tensile strength shall be determined.

The percentage elongation after fracture shall be reported with reference to a gauge length of 50 mm (2 in.). For test pieces having a gauge length less than 50 mm (2 in.), the measured elongation after fracture shall be converted to a percentage elongation in 50 mm (2 in.) in accordance with ISO 2566-1 or ASTM A370.

10.2.4.3 CVN Impact Test

The Charpy test shall be carried out in accordance with ASTM A370 unless ISO 148-1 and the required striker radius (2 mm or 8 mm) are specified in the purchase order.

10.2.4.4 DWT Test

The DWT test shall be carried out in accordance with API 5L3.

10.2.4.5 Full Section Bend Test

The bend test shall be carried out in accordance with ISO 8491 or ASTM A370.

For each test unit, one full-section test piece of appropriate length shall be bent cold through 90° around a mandrel having a diameter no larger than 12D.

10.2.4.6 Guided-bend Test

The guided-bend test shall be carried out in accordance with ISO 5173 or ASTM A370.

The mandrel dimension, A_{gb}, expressed in millimeters (inches), shall not be larger than that determined using Equation (5), with the result rounded to the nearest 1 mm (0.1 in.):

$$A_{gb} = \frac{1.15(D - 2t)}{(\varepsilon \frac{D}{t} - 2\varepsilon - 1)} - t \tag{5}$$

where

D is the specified outside diameter, expressed in millimeters (inches);

t is the specified wall thickness when using full thickness pieces, expressed in millimeters (inches); it is 19 mm (0.748 in.) when using reduced-thickness test pieces;

ε is the strain, as given in Table 23;

1.15 is the peaking factor.

Both test pieces shall be bent 180° in a jig as shown in Figure 9. One test piece shall have the root of the weld directly in contact with the mandrel; the other test piece shall have the face of the weld directly in contact with the mandrel.

Dimensions in millimeters (inches)

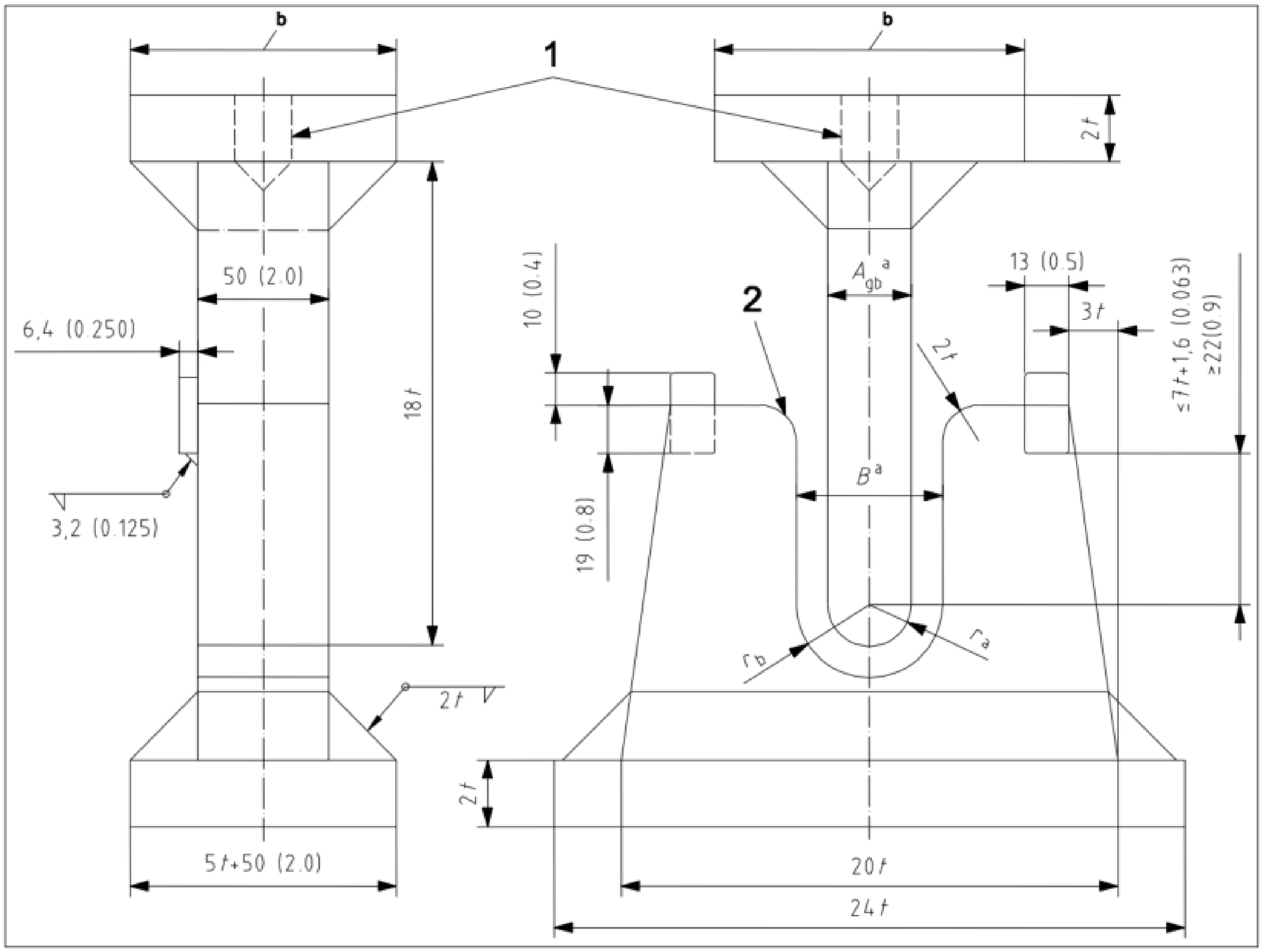

Key

1 tapped mounting hole

2 shoulders, hardened and greased, or hardened rollers

B $A_{gb} + 2t + 3.2$ mm (0.125 in.)

r_a radius of the mandrel for the guided-bend test

r_b radius of the die for the guided-bend test

a These symbols have been retained on the basis of their long-standing use in API 5L and API 5CT [21].

b As needed.

a) Plunger type

Figure 9—Jigs for Guided-bend Test

Dimensions in millimeters (inches)

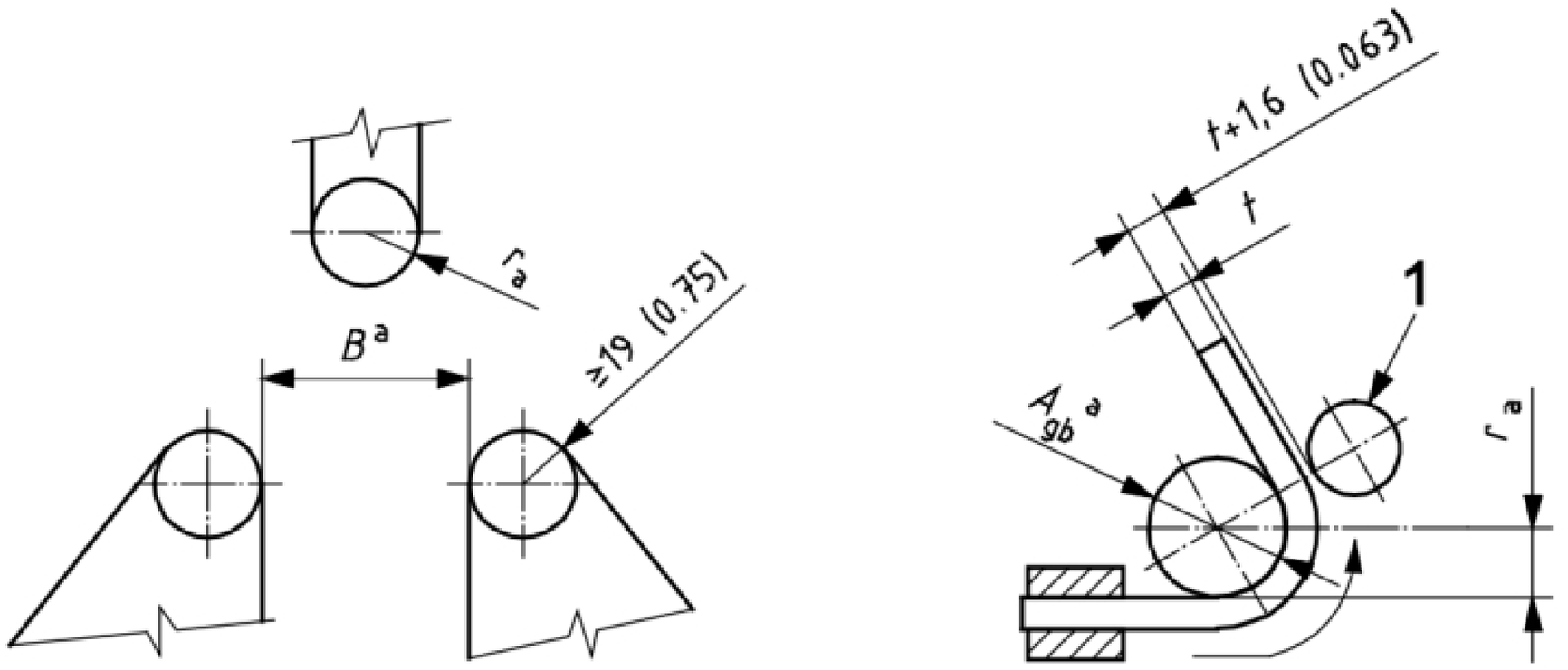

Key

1 roller

B $A_{gb} + 2t + 3.2$ mm (0.125 in.)

a These symbols have been retained on the basis of their long-standing use in API 5L and API 5CT [21].

b) Adjustable type **c) Wrap-around type**

Figure 9—Jigs for Guided-bend Test *(continued)*

Table 23—Strain Values for Guided-bend Test

Pipe Grade	Strain Value [a] ε
L210 or A	0.1650
L245 or B	0.1375
L290 or X42	0.1375
L320 or X46	0.1325
L360 or X52	0.1250
L390 or X56	0.1175
L415 or X60	0.1125
L450 or X65	0.1100
L485 or X70	0.1025
L555 or X80	0.0950
L625 or X90	0.0850
L690 or X100	0.0800
L830 or X120	0.0675

[a] For intermediate grades, the strain values shall be obtained by interpolation, based on the specified minimum tensile strength, with the interpolated value rounded to the nearest multiple of 0.0025.

10.2.4.7 Flattening Test

The flattening test shall be carried out in accordance with ISO 8492 or ASTM A370.

As shown in Figure 6, one of the two test pieces taken from both end-of-coil locations shall be tested with the weld at the 6 o'clock position or 12 o'clock position, whereas the remaining two test pieces shall be tested at the 3 o'clock position or 9 o'clock position.

Test pieces taken from crop ends at weld stops shall be tested at the 3 o'clock position or 9 o'clock position only.

10.2.4.8 Hardness Test

When suspected hard spots are detected by visual inspection, hardness tests shall be carried out in accordance with ISO 6506, ISO 6507, ISO 6508 or ASTM A370 using portable hardness test equipment and methods complying with ASTM A956, ASTM A1038, or ASTM E110, respectively, depending on the method used.

10.2.5 Macrographic and Metallographic Tests

10.2.5.1 Except as allowed by 10.2.5.2, the alignment of internal and external seams of SAW and COW pipe [see Figure 4 d) and Figure 4 e)] shall be verified by macrographic testing.

10.2.5.2 Alternative methods, such as ultrasonic inspection, may be used if agreed, provided that the ability of such equipment to detect misalignment is demonstrated. If such an alternative method is used, a macrographic test shall be carried out at the beginning of the production of each combination of specified outside diameter and specified wall thickness.

10.2.5.3 For pipe that is required to be seam-heat-treated (see 8.8.1 or 8.8.2, whichever is applicable), it shall be verified by metallographic testing that the entire HAZ has been appropriately heat treated over the full wall thickness. For pipe that is not required to be seam-heat-treated (see 8.8.1), it shall be verified by metallographic testing that no untempered martensite remains.

In addition, a hardness test and maximum hardness may be agreed.

10.2.5.4 For SAW pipe seams made with tack welds, the melting and coalescence of the tack weld into the final weld seam shall be verified by macrographic testing [see 8.4.2 a)].

10.2.6 Hydrostatic Test

10.2.6.1 Test pressures for each size of SMLS pipe and for welded pipe with $D \leq 457$ mm (18.000 in.) shall be held for not less than 5 seconds. Test pressures for welded pipe with $D > 457$ mm (18.000 in.) shall be held for not less than 10 seconds. For threaded-and-coupled pipe, the test shall be applied with the couplings made up power-tight if agreed, except that pipe with $D > 323.9$ mm (12.375 in.) may be tested in the plain-end condition. For threaded pipe furnished with couplings made up handling-tight, the hydrostatic test shall be made on the pipe in the plain-end, threads-only, or coupled condition unless a specific condition is specified in the purchase order.

10.2.6.2 In order to ensure that each length of pipe is tested to the required test pressure, each tester, except those on which only continuous welded pipe is tested, shall be equipped with a recording gauge that can record the test pressure and the test duration for each length of pipe, or shall be equipped with some positive and automatic or interlocking device to prevent pipe from being classified as tested until the test requirements (pressure and duration) have been met. Such records or charts shall be available for examination at the manufacturer's facility by the purchaser's inspector, if applicable. The test pressure-measuring device shall be calibrated by means of a dead-weight tester, or equivalent, no more than four

months prior to each use. At the option of the manufacturer, test pressures that are higher than required may be used.

NOTE The specified test pressure represents the gauge pressure value below which the pressure is not permitted to fall during the specified test duration.

10.2.6.3 Test pressures for light-wall threaded pipe shall be as given in Table 24.

10.2.6.4 Test pressures for heavy-wall threaded pipe shall be as given in Table 25.

Table 24—Test Pressures for Light-wall Threaded Pipe

Specified Outside Diameter *D* mm (in.)	Specified Wall Thickness *t* mm (in.)	Test Pressure MPa (psi) min			
		Grade			
		L175 or A25	L175P or A25P	L210 or A	L245 or B
10.3 (0.405)	1.7 (0.068)	4.8 (700)	4.8 (700)	4.8 (700)	4.8 (700)
13.7 (0.540)	2.2 (0.088)	4.8 (700)	4.8 (700)	4.8 (700)	4.8 (700)
17.1 (0.675)	2.3 (0.091)	4.8 (700)	4.8 (700)	4.8 (700)	4.8 (700)
21.3 (0.840)	2.8 (0.109)	4.8 (700)	4.8 (700)	4.8 (700)	4.8 (700)
26.7 (1.050)	2.9 (0.113)	4.8 (700)	4.8 (700)	4.8 (700)	4.8 (700)
33.4 (1.315)	3.4 (0.133)	4.8 (700)	4.8 (700)	4.8 (700)	4.8 (700)
42.2 (1.660)	3.6 (0.140)	6.9 (1000)	6.9 (1000)	6.9 (1000)	6.9 (1000)
48.3 (1.900)	3.7 (0.145)	6.9 (1000)	6.9 (1000)	6.9 (1000)	6.9 (1000)
60.3 (2.375)	3.9 (0.154)	6.9 (1000)	6.9 (1000)	6.9 (1000)	6.9 (1000)
73.0 (2.875)	5.2 (0.203)	6.9 (1000)	6.9 (1000)	6.9 (1000)	6.9 (1000)
88.9 (3.500)	5.5 (0.216)	6.9 (1000)	6.9 (1000)	6.9 (1000)	6.9 (1000)
101.6 (4.000)	5.7 (0.226)	8.3 (1200)	8.3 (1200)	8.3 (1200)	9.0 (1300)
114.3 (4.500)	6.0 (0.237)	8.3 (1200)	8.3 (1200)	8.3 (1200)	9.0 (1300)
141.3 (5.563)	6.6 (0.258)	8.3 (1200)	8.3 (1200)	8.3 (1200)	9.0 (1300)
168.3 (6.625)	7.1 (0.280)	[a]	[a]	8.3 (1200)	9.0 (1300)
219.1 (8.625)	7.0 (0.277)	[a]	[a]	7.9 (1160)	9.2 (1350)
219.1 (8.625)	8.2 (0.258)	[a]	[a]	9.3 (1340)	10.8 (1570)
273.1 (10.750)	7.1 (0.280)	[a]	[a]	6.5 (940)	7.5 (1090)
273.1 (10.750)	7.8 (0.307)	[a]	[a]	7.1 (1030)	8.3 (1200)
273.1 (10.750)	9.3 (0.365)	[a]	[a]	8.5 (1220)	9.8 (1430)
323.9 (12.750)	8.4 (0.330)	[a]	[a]	6.4 (930)	7.5 (1090)
323.9 (12.750)	9.5 (0.375)	[a]	[a]	7.3 (1060)	8.5 (1240)
355.6 (14.000)	9.5 (0.375)	[a]	[a]	6.6 (960)	7.7 (1130)
406.4 (16.000)	9.5 (0.375)	[a]	[a]	5.8 (840)	6.8 (980)
457 (18.000)	9.5 (0.375)	[a]	[a]	5.2 (750)	6.0 (880)
508 (20.000)	9.5 (0.375)	[a]	[a]	4.6 (680)	5.4 (790)

[a] Not applicable.

Table 25—Test Pressures for Heavy-wall Threaded Pipe

Specified Outside Diameter D mm (in.)	Specified Wall Thickness t mm (in.)	Test Pressure MPa (psi) min			
		Grade			
		L175 or A25	L175P or A25P	L210 or A	L245 or B
10.3 (0.405)	2.4 (0.095)	5.9 (850)	5.9 (850)	5.9 (850)	5.9 (850)
13.7 (0.540)	3.0 (0.119)	5.9 (850)	5.9 (850)	5.9 (850)	5.9 (850)
17.1 (0.675)	3.2 (0.126)	5.9 (850)	5.9 (850)	5.9 (850)	5.9 (850)
21.3 (0.840)	3.7 (0.147)	5.9 (850)	5.9 (850)	5.9 (850)	5.9 (850)
26.7 (1.050)	3.9 (0.154)	5.9 (850)	5.9 (850)	5.9 (850)	5.9 (850)
33.4 (1.315)	4.5 (0.179)	5.9 (850)	5.9 (850)	5.9 (850)	5.9 (850)
42.2 (1.660)	4.9 (0.191)	9.0 (1300)	9.0 (1300)	10.3 (1500)	11.0 (1600)
48.3 (1.900)	5.1 (0.200)	9.0 (1300)	9.0 (1300)	10.3 (1500)	11.0 (1600)
60.3 (2.375)	5.5 (0.218)	9.0 (1300)	9.0 (1300)	17.0 (2470)	17.0 (2470)
73.0 (2.875)	7.0 (0.276)	9.0 (1300)	9.0 (1300)	17.0 (2470)	17.0 (2470)
88.9 (3.500)	7.6 (0.300)	9.0 (1300)	9.0 (1300)	17.0 (2470)	17.0 (2470)
101.6 (4.000)	8.1 (0.318)	11.7 (1700)	11.7 (1700)	19.0 (2760)	19.0 (2760)
114.3 (4.500)	8.6 (0.337)	11.7 (1700)	11.7 (1700)	18.7 (2700)	19.0 (2760)
141.3 (5.563)	9.5 (0.375)	11.7 (1700)	11.7 (1700)	16.7 (2430)	19.0 (2760)
168.3 (6.625)	11.0 (0.432)	[a]	[a]	16.2 (2350)	18.9 (2740)
219.1 (8.625)	12.7 (0.500)	[a]	[a]	14.4 (2090)	16.8 (2430)
273.1 (10.750)	12.7 (0.500)	[a]	[a]	11.6 (1670)	13.4 (1950)
323.9 (12.375)	12.7 (0.500)	[a]	[a]	9.7 (1410)	11.3 (1650)

[a] Not applicable.

10.2.6.5 Except as allowed by 10.2.6.6, 10.2.6.7, and the footnotes to Table 26, the hydrostatic test pressure, P, expressed in megapascals (pounds per square inch), for plain-end pipe shall be determined using Equation (6), with the results rounded to the nearest 0.1 MPa (10 psi):

$$P = \frac{2St}{D} \tag{6}$$

where

S is the hoop stress, expressed in megapascals (pounds per square inch), equal to a percentage of the specified minimum yield strength of the pipe, as given in Table 26;

t is the specified wall thickness, expressed in millimeters (inches);

D is the specified outside diameter, expressed in millimeters (inches).

Table 26—Percentage of Specified Minimum Yield Strength for Determination of S

Pipe Grade	Specified Outside Diameter D mm (in.)	Percentage of Specified Minimum Yield Strength for Determination of S	
		Standard Test Pressure	Alternative Test Pressure
L175 or A25	≤ 141.3 (5.563)	60 [a]	75 [a]
L175P or A25P	≤ 141.3 (5.563)	60 [a]	75 [a]
L210 or A	Any	60 [a]	75 [a]
L245 or B	Any	60 [a]	75 [a]
L290 or X42 to L830 or X120	≤ 141.3 (5.563)	60 [b]	75 [c]
	> 141.3 (5.563) to 219.1 (8.625)	75 [b]	75 [c]
	> 219.1 (8.625) to < 508 (20.000)	85 [b]	85 [c]
	≥ 508 (20.000)	90 [b]	90 [c]

[a] For D ≤ 88.9 mm (3.500 in.), it is not necessary that the test pressure exceed 17.0 MPa (2470 psi); for D > 88.9 mm (3.500 in.), it is not necessary that the test pressure exceed 19.0 MPa (2760 psi).

[b] It is not necessary that the test pressure exceed 20.5 MPa (2970 psi).

[c] For D ≤ 406.4 mm (16.000 in.), it is not necessary that the test pressure exceed 50.0 MPa (7260 psi); for D > 406.4 mm (16.000 in.), it is not necessary that the test pressure exceed 25.0 MPa (3630 psi).

10.2.6.6 If pressure testing involves an end-sealing ram that produces a compressive longitudinal stress, the hydrostatic test pressure, P, expressed in megapascals (pounds per square inch), may be determined using Equation (7), with the result rounded to the nearest 0.1 MPa (10 psi), provided that the required test pressure produces a hoop stress in excess of 90 % of the specified minimum yield strength:

$$P = \frac{S - \left(\frac{P_R \times A_R}{A_p} \right)}{\frac{D}{2t} - \frac{A_I}{A_p}} \tag{7}$$

where

S is the hoop stress, expressed in megapascals (pounds per square inch), equal to a percentage of the specified minimum yield strength of the pipe (see Table 26);

P_R is the internal pressure on end-sealing ram, expressed in megapascals (pounds per square inch);

A_R is the cross-sectional area of end-sealing ram, expressed in square millimeters (square inches);

A_p is the cross-sectional area of pipe wall, expressed in square millimeters (square inches);

A_I is the internal cross-sectional area of pipe, expressed in square millimeters (square inches);

D is the specified outside diameter, expressed in millimeters (inches);

t is the specified wall thickness, expressed in millimeters (inches).

10.2.6.7 If agreed, the minimum permissible wall thickness, t_{min}, may be used in place of the specified wall thickness, t, for the determination of the required test pressure (see 10.2.6.5 or 10.2.6.6, whichever is

applicable), provided that a hoop stress of at least 95 % of the specified minimum yield strength of the pipe is used.

10.2.7 Visual Inspection

10.2.7.1 Except as allowed by 10.2.7.2, each pipe shall be visually inspected to detect surface defects, with an illuminance of at least 300 lx (28 fc). Such inspection shall be over the entire external surface and shall cover as much of the internal surface as is practical.

NOTE Good practice is for the entire inside surface of large diameter SAW and COW pipe to be visually inspected from inside the pipe.

10.2.7.2 Visual inspection may be replaced by other inspection methods that have a demonstrated capability of detecting surface defects.

10.2.7.3 Visual inspection shall be conducted by personnel who

a) are trained to detect and evaluate surface imperfections;

b) have visual acuity that meets the applicable requirements of ISO 11484 or ASNT SNT-TC-1A or equivalent.

10.2.7.4 The surface of cold-formed welded pipe shall be inspected to detect geometric deviations in the contour of the pipe. If this inspection fails to disclose mechanical damage as the cause of the irregular surface, but indicates that the irregular surface can be attributed to a hard spot, the dimensions of the area, and if necessary its hardness, shall be determined. The choice of the test method for hardness testing is at the option of the manufacturer. If the dimensions and hardness exceed the acceptance criteria given in 9.10.6, the hard spot shall be removed in accordance with procedures specified in 9.10.7 and Annex C.

10.2.8 Dimensional Testing

10.2.8.1 The diameter of pipe shall be measured at least once per 4 hours per operating shift to verify conformance with the diameter tolerances (see Table 10). Unless a method is specified in the purchase order, diameter measurements shall be made with a circumferential tape, or appropriate uses of micrometer, ring gauge, snap gauge, caliper, ovality gauge, coordinate measuring machine, or optical measuring device. Unless otherwise agreed, for $D \geq 508$ mm (20.000 in.), measurements made by circumferential tape shall govern in case of dispute.

NOTE 1 Ring gauges used to measure pipe diameter are usually manufactured to specified dimensions for each pipe size from dimensionally stable material such as steel, aluminum, or other approved material and shall be of rigid construction but sufficiently light to permit manipulation by one inspector. The ring gauge design usually incorporates handles to allow the inspector to position the gauge accurately and safely within or over the pipe. The diameter of internal ring gauges is usually 3.2 mm (0.125 in.) less than the nominal internal diameter of the pipe. External ring gauges usually have a bore diameter not exceeding the sum of the specified outside diameter of the pipe plus the allowable diameter tolerance. For inspection of submerged arc welded pipe, ring gauges can be slotted or notched to permit passage of the gauge over the weld reinforcement. It is necessary that the pipe permit the passage of the ring gauge within (internal) or over (external) each end of the pipe for a minimum distance of 100 mm (4.0 in.).

NOTE 2 Coordinate measuring machines are mechanical systems designed to track a mobile measuring probe to determine the coordinates of points on a work surface.

10.2.8.2 The out-of-roundness of pipe shall be determined at least once per 4 hours per operating shift. Except as allowed by 10.2.8.3, the out-of-roundness shall be determined as the difference between the largest outside diameter and the smallest outside diameter, as measured in the same cross-sectional plane.

NOTE Out-of-roundness measurements taken in stacks are invalid due to the elastic deformations caused by forces exerted by pipe adjacent to those being measured.

10.2.8.3 If agreed, for expanded pipe with D ≥ 219.1 mm (8.625 in.) and for nonexpanded pipe, inside diameter measurements shall be used to determine conformance with the diameter tolerances. The out-of-roundness may be determined as the difference between the largest inside diameter and the smallest inside diameter, as measured in the same cross-sectional plane.

10.2.8.4 For SAW and COW pipe, the greatest deviation of flat spots or peaks from the normal contour of the pipe at the weld at a pipe end shall be measured with respect to a template that is oriented transverse to the pipe axis and has a length of 0.25D or 200 mm (8.0 in.), whichever is the lesser.

10.2.8.5 Each length of pipe shall be measured for conformance with the specified wall thickness requirements. The wall thickness at any location shall be within the tolerances specified in Table 11, except that the weld area shall not be limited by the plus tolerance. Wall thickness measurements shall be made with a mechanical caliper or with a properly calibrated nondestructive inspection device of appropriate accuracy. In case of dispute, the measurement determined by use of the mechanical caliper shall govern. The mechanical caliper shall be fitted with contact pins. The end of the pin contacting the inside surface of the pipe shall be rounded to a maximum radius of 38.1 mm (1.50 in.) for pipe of size 168.3 mm (6.625 in.) or larger, and up to a radius of D/4 for pipe smaller than size 168.3 mm (6.625 in.) with a minimum radius of 3.2 mm (0.125 in.). The end of the pin contacting the outside surface of the pipe shall be either flat or rounded to a minimum radius of 31.2 mm (1.25 in.).

10.2.8.6 For threaded-and-coupled pipe, the length shall be measured to the outer face of the coupling. The length of threaded-and-coupled pipe may be determined before the couplings are attached, provided the proper allowance is made for the length of the couplings.

10.2.8.7 For the verification of conformance with the dimensional and geometrical requirements specified in 9.11 to 9.13, suitable methods shall be used. Unless particular methods are specified in the purchase order, the methods used shall be at the discretion of the manufacturer.

10.2.9 Weighing

For pipe with D ≥ 141.3 mm (5.563 in.), the lengths of pipe shall be weighed individually, except that for welded jointers it shall be permissible to weigh the individual lengths comprising the jointer or the jointer itself. For pipe with D < 141.3 mm (5.563 in.), the lengths of pipe shall be weighed either individually or in a convenient group of pipe selected by the manufacturer.

Threaded-and-coupled pipe shall be weighed either

a) with the couplings screwed on but without thread protectors, except for order items with a mass of 18 tonnes (20 tons) or more for which proper allowance shall be made for the weight of the thread protectors, or

b) before the couplings are attached, provided that allowance is made for the weight of the couplings.

10.2.10 Nondestructive Inspection

Nondestructive inspection shall be in accordance with Annex E.

10.2.11 Reprocessing

If any mechanical property test result for a test unit of pipe fails to conform to the applicable requirements, the manufacturer may elect to heat treat the test unit of pipe in accordance with the requirements of Table 3, consider it a new test unit, test it in accordance with the requirements of 10.2.12 and 10.2.4 that are

applicable to the order item, and proceed in accordance with the applicable requirements of this specification. After one reprocessing heat treatment, any additional reprocessing heat treatment shall be subject to agreement with the purchaser.

For non-heat-treated pipe, any reprocessing heat treatment shall be subject to agreement with the purchaser. For heat-treated pipe, any reprocessing with a different type of heat treatment (see Table 3) shall be subject to agreement with the purchaser.

10.2.12 Retesting

10.2.12.1 Recheck Analyses

If the product analyses of both samples representing the heat fail to conform to the specified requirements, at the manufacturer's option either the heat shall be rejected or the remainder of the heat shall be tested individually for conformance with the specified requirements. If the product analysis of only one of the samples representing the heat fails to conform to the specified requirements, at the manufacturer's option, either the heat shall be rejected or two recheck analyses shall be made using two additional samples from the heat. If both recheck analyses conform to the specified requirements, the heat shall be accepted, except for the pipe, plate, or coil from which the initial sample that failed was taken. If one or both recheck analyses fail to conform to the specified requirements, at the manufacturer's option, either the heat shall be rejected or the remainder of the heat shall be tested individually for conformance with the specified requirements.

For such individual testing, analyses for only the rejecting element or elements need be determined.

Samples for recheck analyses shall be taken in the same location as specified for product analyses samples.

10.2.12.2 Tensile Retests

Tensile retest provisions are as follows.

a) For all PSL 1 products, PSL 2 products with R, N, and Q delivery conditions, and PSL 2 products with M delivery conditions of grades less than L450 or X65 (see Tables 2 and 3).

If the tensile test specimen representing the test unit of pipe fails to conform to the specified requirements, the manufacturer may elect to retest two additional lengths from the same test unit. If both retested specimens conform to the specified requirements, each of the lengths in the test unit shall be accepted, except the length from which the initial specimen was taken. If one or both of the retested specimens fail to conform to the specified requirements, the manufacturer may elect to individually test the remaining lengths in the test unit. Specimens for retest shall be taken in the same manner as the specimen that failed to meet the minimum requirements. If applicable, reprocessing shall be as defined in 10.2.11.

b) For PSL 2 products with M delivery conditions of grades L450 or X65, or greater (see Table 3).

If the tensile specimen representing the test unit fails to conform to the specified requirements, the manufacturer may elect to retest two additional lengths from the same test unit. Specimens for retest shall be taken in the same manner as the original specimen that failed to meet the minimum requirements but should be from two different mother coils or plates, as applicable. If one or both of the retested specimens fail to conform to the specified requirements, the manufacturer may elect to individually test the remaining lengths in the test unit. If both retest specimens conform to the specified requirements, the test unit shall be accepted except the lengths from the mother coil or plate from which the initial specimen was taken. These lengths shall have one of the following dispositions:

1) all pipe shall be rejected, or

2) each pipe in the test unit shall be tested with the pipe with satisfactory test results accepted, or

3) provided individual pipe traceability to mother coil/plate location, the manufacturer shall test additional lengths adjacent to (before, after and beside, as applicable) the initial failure within the mother coil or plate considering adjacent daughter coil(s) or plate(s) as applicable. Pipe testing shall continue until satisfactory results surround the nonconforming section of the mother coil/plate. The pipe from the nonconforming section of mother coil/plate shall be rejected and the remainder of the pipe from the test unit accepted.

If applicable, reprocessing shall be defined as in 10.2.11.

10.2.12.3 Flattening Retests

Flattening retest provisions are as follows.

a) Nonexpanded electric welded pipe in grades higher than L175 or A25 and nonexpanded laser welded pipe smaller than 323.9 mm (12.750 in.) produced in single lengths.

   The manufacturer may elect to retest any failed end until the requirements are met, providing the finished pipe is not less than 80 % of its length after initial cropping.

b) Nonexpanded electric welded pipe in grades higher than L175 or A25 and nonexpanded laser welded pipe smaller than 323.9 mm (12.750 in.) produced in multiple lengths.

   Where one or more of the flattening tests fail to conform to the specified requirements, the manufacturer may retest the pipe end after cropping the defective pipe end. Alternatively the manufacturer may reject the defective pipe(s) and retest the adjacent end of the next pipe. The retest shall consist of two specimens, one tested with the seam weld at 0º and one tested with the seam weld at 90º. If the retest fails to conform to the specified requirements, the manufacturer may either reject the pipe produced from the affected multiple length or retest each end of each remaining individual length produced from the coil with the weld alternatively at 0º and 90º. If the retest conforms to the specified requirements, the remaining portion of the multiple lengths shall be accepted.

c) Cold-expanded electric welded pipe in grades higher than L175 or A25, each welded Grade L175 or A25 in sizes 60.3 mm (2.875 in.) and larger; and cold-expanded laser welded pipe smaller than size 323.9 mm (12.750 in.).

   The manufacturer may elect to retest one end of each of two additional lengths of the same test unit. If both retests are acceptable, each length in the test unit shall be accepted, except the original failed length. If one or both retests fail, the manufacturer may elect to repeat the test on specimens cut from one end of each of the remaining individual lengths in the test unit.

If applicable, reprocessing shall be as defined in 10.2.11.

10.2.12.4 Bend Retests

If the specimen fails to conform to the specified requirements, the manufacturer may elect to make retests on specimens cut from two additional lengths from the same test unit. If each retest specimen conforms to the specified requirements, each of the lengths in the test unit shall be accepted, except the length from which the initial specimen was taken. If one or more of the retest specimens fail to conform to the specified requirements, the manufacturer may elect to repeat the test on specimens cut from the individual lengths remaining in the test unit.

If applicable, reprocessing shall be as defined in 10.2.11.

10.2.12.5 Guided-bend Retests

If one or both of the guided-bend specimens fail to conform to the specified requirements, the manufacturer may elect to repeat the tests on specimens cut from two additional lengths of pipe from the same test unit. If such specimens conform to the specified requirements, each length in the test unit shall be accepted, except the length initially selected for test. If any of the retested specimens fail to pass the specified requirements, the manufacturer may elect to test specimens cut from individual lengths remaining in the test unit. The manufacturer may also elect to retest any length that has failed to pass the test by cropping back and cutting two additional specimens from the same end. If the requirements of the original test are met by both of these additional tests, that length shall be acceptable. No further cropping and retesting is permitted. Specimens for retest shall be taken in the same manner as specified in Tables 19 and 20 and 10.2.3.6.

If applicable, reprocessing shall be as defined in 10.2.11.

10.2.12.6 Charpy Retests

In the event that a set of Charpy test specimens fails to meet the acceptance criteria, the manufacturer may elect to replace the test unit of material involved or alternatively to test two more lengths from that test unit. If both of the new tests meet the acceptance criteria, then each pipe in that test unit, with the exception of the original selected length, shall be considered to meet the requirement. Failure of either of the two additional tests shall require testing of each length in the test unit for acceptance.

If applicable, reprocessing shall be as defined in 10.2.11.

10.2.12.7 Hardness Retests

If the hardness test specimen representing a test unit of pipe fails to conform to the specified requirements, the manufacturer may elect to retest two additional lengths from the same test unit. If both retested specimens conform to the specified requirements, each of the lengths in a test unit shall be accepted, except the length from which the initial specimen was taken. If one or both of the retested specimens fail to conform to the specified requirements, the manufacturer may elect to individually test the remaining lengths in the test unit. Specimens for retest shall be taken in the same manner as the specimen that failed to meet the minimum requirements (see H.7 or J.8, as applicable).

If applicable, reprocessing shall be as defined in 10.2.11.

10.2.12.8 DWT Retests

In the event that a set of DWT test specimens fail to meet the acceptance criteria, the manufacturer may elect to replace the test unit of material involved or alternatively to test two more lengths from that test unit. If both of the new tests meet the acceptance criteria, then each pipe in that test unit, with the exception of the original selected length, shall be accepted. Failure of either of the two additional tests shall require testing of each length in the test unit for acceptance. Specimens for retest shall be taken in the same manner as the specimen that failed to meet the minimum requirements (see 10.2.3).

If applicable, reprocessing shall be as defined in 10.2.11.

11 Marking

11.1 General

11.1.1 Pipe and pipe couplings manufactured in accordance with this specification shall be marked by the manufacturer in the same sequence as they appear in 11.2.1 a) to j) as applicable.

NOTE While the required markings are intended to be applied in a single straight line, the markings are permitted to wrap around on to multiple lines provided the sequence of information is maintained as read from left to right and from top to bottom.

11.1.2 The required markings on couplings shall be die-stamped or, if agreed, paint-stenciled.

11.1.3 If the purchase order requires API 5L pipe to be supplied, markings identifying API 5L pipe shall be required.

11.1.4 Additional markings, as desired by the manufacturer or as specified in the purchase order, may be applied but shall not interrupt the sequence of the required markings as they appear in 11.2.1 a) to j) as applicable. Such additional markings shall be located after the end of the required marking sequence or as a separate marking at some other location on the pipe.

11.2 Pipe Markings

11.2.1 Pipe markings shall include the following information sequentially, as applicable:

a) name or mark of the manufacturer of the pipe (X);

b) "API Spec 5L" shall be marked when the product is in complete compliance with this specification, appropriate annexes, and this section. Products in compliance with multiple compatible standards may be marked with the name of each standard;

c) specified outside diameter;

d) specified wall thickness;

e) pipe steel grade (steel name) (see Table 1, Table H.1, or Table J.1, whichever is applicable) and, if agreed, both corresponding SI and USC steel grades may be marked on the pipe with the corresponding steel grade marked immediately after the order item steel grade;

f) PSL designation followed by the letter G if Annex G is applicable (see G.5.1);

g) type of pipe (see Table 2);

h) mark of the customer's inspection representative (Y), if applicable;

i) an identification number (Z), which permits the correlation of the product or delivery unit (e.g. bundled pipe) with the related inspection document, if applicable;

j) if the specified hydrostatic test pressure is higher than the test pressure specified in Tables 24 or 25 as applicable, or exceeding the pressures stated in footnote a), b), or c) of Table 26, if applicable, the word TESTED shall be marked at the end of the marking immediately followed by the specified test pressure in pounds per square inch if ordered to USC units or megapascals if ordered to SI units.

EXAMPLE 1 For SI units:

X API Spec 5L 508 12.7 L360M PSL 2 SAWL Y Z

EXAMPLE 2 For USC units:

X API Spec 5L 20 0.500 X52M PSL 2 SAWL Y Z

EXAMPLE 3 For SI units, if pipe also meets the requirements of compatible standard ABC:

X API Spec 5L/ABC 508 12.7 L360M PSL 2 SAWL Y Z

EXAMPLE 4 For USC units, if pipe also meets the requirements of compatible standard ABC:

X API Spec 5L/ABC 20 0.500 X52M PSL 2 SAWL Y Z

EXAMPLE 5 For SI units, tested to 17.5 MPa, if hydrotest pressure differs from the standard pressure:

X API Spec 5L 508 12.7 L360M PSL 2 SAWL Y Z TESTED 17.5

EXAMPLE 6 For USC units, tested to 2540 psi, if hydrotest pressure differs from the standard pressure:

X API Spec 5L 20 0.500 X52M PSL 2 SAWL Y Z TESTED 2540

EXAMPLE 7 For USC units, with both corresponding steel grades marked and application of Annex G indicated:

X API Spec 5L 20 0.500 X52M L360M PSL2G SAWL Y Z

EXAMPLE 8 For SI units, with both corresponding steel grades marked and application of Annex G indicated:

X API Spec 5L 508 12.7 L360M X52M PSL2G SAWL Y Z

NOTE For specified outside diameter markings in USC units, it is not necessary to include the ending zero digits to the right of the decimal sign.

11.2.2 If the API Monogram is intended to be applied [see 7.2 c) 61)], the requirements of Annex A and Annex O apply.

11.2.3 Except as allowed by 11.2.4 and 11.2.5, the required markings shall be applied durably and legibly, as follows:

a) For pipe with $D \leq 48.3$ mm (1.900 in.), the markings shall be in one or more of the following locations:

   1) on a tag fixed to the bundle,

   2) on the straps or banding clips used to tie the bundle,

   3) on one end of each pipe, or

   4) continuous along the length.

b) For pipe with $D > 48.3$ mm (1.900 in.), unless a specific surface is specified in the purchase order, the markings shall be:

   1) on the outside surface of the pipe, in the sequence listed in 11.2.1, starting at a point between 450 mm and 760 mm (1.5 ft and 2.5 ft) from one of the pipe ends, or

   2) on the inside surface of the pipe, starting at a point at least 150 mm (6.0 in.) from one of the pipe ends.

11.2.4 If agreed, low-stress die-stamping or vibro-etching on the pipe surface may be used, subject to the following limitations.

a) Such marks shall be on the pipe bevel face or within 150 mm (6.0 in.) of one of the pipe ends.

b) Such marks shall be at least 25 mm (1.0 in.) from any weld.

c) Cold die-stamping [at temperatures < 100 °C (210 °F)] of plate, coil, or pipe not subsequently heat treated shall be done only if rounded or blunt dies are used.

d) Unless otherwise agreed and specified on the purchase order, cold die-stamping shall not be used on pipe with a specified wall thickness of 4.0 mm (0.156 in.) or less and pipe of grades higher than L175 or A25 not subsequently heat treated.

11.2.5 For pipe intended for subsequent coating, if agreed, marking may be done at the coater's facility rather than at the pipe mill. In such cases, traceability shall be ensured, e.g. by application of a unique number (by individual pipe or heat of steel).

11.2.6 If a temporary protective coating (see 12.1.2) is applied, the markings shall be legible after such coating.

11.2.7 In addition to the markings specified in 11.2.1, the pipe length shall be marked as follows, in meters to two decimal places (feet to tenths of a foot) or, if agreed, in a different format.

a) For pipe with $D \leq 48.3$ mm (1.900 in.), the total length of pipe in the bundle shall be marked on a tag, strap, or banding clip attached to the bundle.

b) Unless a specific surface is specified on the purchase order for pipe with $D > 48.3$ mm (1.900 in.), the individual pipe length (as measured on the finished pipe) shall be marked at a convenient location:

   1) on the outside surface of the pipe, or

   2) on the inside surface of the pipe.

c) For pipe furnished with couplings, the length as measured to the outer face of the coupling shall be marked.

11.2.8 If agreed, the manufacturer shall apply a daub of paint, approximately 50 mm (2 in.) in diameter, on the inside surface of each length of pipe. The paint color shall be as given in Table 27 if the pipe grade is applicable; for all other grades, the paint color shall be as specified in the purchase order.

Table 27—Paint Color

Pipe Grade	Paint Color
L320 or X46	Black
L360 or X52	Green
L390 or X56	Blue
L415 or X60	Red
L450 or X65	White
L485 or X70	Purple-violet
L555 or X80	Yellow

11.3 Coupling Markings

All couplings in sizes 60.3 mm (2.375 in.) and larger shall be identified with the manufacturer's name or mark together with API 5L.

11.4 Marking of Pipe to Multiple Grades

11.4.1 Marking of pipe to multiple grades is permitted only by agreement between the purchaser and the manufacturer within the following limits:

a) pipe may have multiple markings within the following grade ranges:

   1) ≤ L290 (X42);

   2) > L290 (X42) to < L415 (X60);

b) for L415 (X60) and above, multiple grade markings are not allowed;

c) pipe shall be marked to only one PSL level.

11.4.2 The manufacturer is responsible for ensuring that the pipe conforms to the requirements of each of the certified grades. This allows pipe to be used as any of the grades individually.

11.4.3 If pipe is marked to multiple grades, a single inspection document shall be issued referencing the grade combination as marked on the pipe. The inspection document may contain a specific statement that pipe conforms to each grade individually.

11.4.4 After delivery of the pipe, no re-marking or re-certification of the pipe to a different grade or different PSL level (PSL 1 to PSL 2) shall be permitted.

11.5 Thread Identification and Certification

11.5.1 At the manufacturer's option, threaded-end pipe may be identified by stamping or stenciling the pipe adjacent to the threaded ends, with the manufacturers name or mark, API 5B (to indicate the applicable threading specification), the specified outside diameter of the pipe, and the letters "LP" (to indicate the type of thread). The thread marking may be applied to products that do or do not bear the API Monogram.

EXAMPLE Size 168.3 mm (6.625 in.) threaded-end pipe is marked as follows, using the value that is appropriate for the pipe outside diameter specified on the purchase order:

For USC units: X API Spec 5B 6.625 LP

or

For SI units X API Spec 5B 168.3 LP

11.5.2 The use of the letters "API Spec 5B" as provided by 11.5.1 shall constitute a certification by the manufacturer that the threads so marked comply with the requirements in API 5B but should not be construed by the purchaser as a representation that the product so marked is, in its entirety, in accordance with any API Specification. Manufacturers who use the letters "API Spec 5B" for thread identification are required to have access to properly certified API master pipe gauges in accordance with API 5B.

11.6 Pipe Processor Markings

Pipe heat treated by a processor other that the original pipe manufacturer shall be marked as stipulated in the applicable subsections of Section 11. The processor shall remove any marking that does not indicate the new condition of the product as a result of heat treating (such as prior grade identity and original pipe manufacturer's name or logo).

If a processor is subcontracted by the pipe manufacturer and performs operations that unavoidably remove or obliterate the marking, the subcontractor may reapply the marking provided the reapplication is controlled by the pipe manufacturer.

12 Coatings and Thread Protectors

12.1 Coatings and Linings

12.1.1 Except as allowed by 12.1.2 to 12.1.4, pipe shall be delivered bare (not coated).

12.1.2 If agreed, pipe shall be delivered with a temporary external coating to provide protection from rusting in storage and transit. Such coating shall be hard to the touch and smooth, without excessive sags.

12.1.3 If agreed, pipe shall be delivered with a special coating.

12.1.4 If agreed, pipe shall be delivered with a lining.

12.2 Thread Protectors

12.2.1 For threaded pipe with D < 60.3 mm (2.375 in.), the thread protectors shall be suitable fabric wrappings or shall be suitable metal, fiber, or plastic protectors.

12.2.2 For threaded pipe with $D \geq$ 60.3 mm (2.375 in.), the thread protectors shall be of such design, material, and mechanical strength as to protect the thread and pipe end from damage under normal handling and transportation conditions.

12.2.3 Thread protectors shall cover the full length of the thread on the pipe and shall exclude water and dirt from the thread during transportation and the period of normal storage, which is considered to be on the order of 1 year.

12.2.4 The thread forms in thread protectors shall be such that they do not damage the pipe threads.

12.2.5 Protector material shall contain no compounds that are capable of causing corrosion or promoting adherence of the protectors to the threads and shall be suitable for service at temperatures of –45 °C to +65 °C (–50 °F to +150 °F).

13 Retention of Records

Records of the following inspections, if applicable, shall be retained by the manufacturer and shall be made available to the purchaser, upon request, for a period of 3 years after the date of purchase from the manufacturer:

a) heat and product analyses,

b) tensile tests,

c) guided-bend tests,

d) CVN tests,

e) DWT tests,

f) hydrostatic-tester recorder charts or electronic methods of record storage,

g) radiographic images for pipe inspection,

h) nondestructive inspection by other methods where applicable,

i) qualifications of nondestructive inspection personnel,

j) radiographic images for jointer welds,

k) repair welding procedure tests, and

l) records of any other test as specified in the annexes or the purchase order, including all welding procedure specification (WPS) and welding procedure qualification test records (WPQT/PQR) (see Annex D and Annex M).

14 Pipe Loading

If the manufacturer is responsible for the shipment of pipe, the manufacturer shall prepare and follow loading diagrams that detail how the pipe is to be arranged, protected, and secured on trucks, railcars, barges, or ocean-going vessels, whichever is applicable. The loading shall be designed to prevent end damage, abrasion, peening, and fatigue cracking. The loading shall comply with any rules, codes, standards, or recommended practices that are applicable.

NOTE For additional information refer to API 5L1 [18] and API 5LW [19].

Annex A
(informative)

API Monogram Program
Use of the API Monogram by Licensees

A.1 Scope

A.1.1 Applicability

This annex is normative (mandatory) for products supplied bearing the API Monogram and manufactured at a facility licensed by API; for all other instances, it is not applicable.

A.1.2 General

The API Monogram® is a registered certification mark owned by the API and authorized for licensing by the API Board of Directors. Through the API Monogram Program, API licenses product manufacturers to apply the API Monogram to products that comply with product specifications and have been manufactured under a quality management system that meets the requirements of API Q1. API maintains a complete, searchable list of all Monogram licensees on the API Composite List website (www.api.org/compositelist).

The application of the API Monogram and license number on products constitutes a representation and warranty by the licensee to API and to purchasers of the products that, as of the date indicated, the products were manufactured under a quality management system conforming to the requirements of API Q1 and that the product conforms in every detail to the applicable standard(s) or product specification(s). API Monogram program licenses are issued only after an onsite audit has verified that an organization has implemented and continually maintained a quality management system that meets the requirements of API Q1 and that the resulting products satisfy the requirements of the applicable API product specification(s) and/or standard(s). Although any manufacturer may claim that its products meet API product requirements without monogramming them, only manufacturers with a license from API can apply the API Monogram to their products.

Together with the requirements of the API Monogram license agreement, this annex establishes the requirements for those organizations that wish to voluntarily obtain an API license to provide API monogrammed products that satisfy the requirements of the applicable API product specification(s) and/or standard(s) and API Monogram Program requirements.

For information on becoming an API Monogram licensee, please contact API, Certification Programs, 1220 L Street, NW, Washington, DC 20005 or call 202-682-8145 or by e-mail at certification@api.org.

A.2 Normative References

In addition to the referenced standards listed earlier in this document, this annex references the following standard:

API Specification Q1, *Specification for Quality Management System Requirements for Manufacturing Organizations for the Petroleum and Natural Gas Industry*

For licensees under the Monogram Program, the latest version of this document shall be used. The requirements identified therein are mandatory.

A.3 API Monogram Program: Licensee Responsibilities

A.3.1 Monogram Program Requirements

For all organizations desiring to acquire and maintain a license to use the API Monogram, conformance with the following shall be required at all times:

a) the quality management system requirements of API Q1;

b) the API Monogram Program requirements of API Q1, Annex A;

c) the requirements contained in the API product specification(s) to which the organization is licensed;

d) the requirements contained in the API Monogram Program License Agreement.

A.3.2 Control of the Application and Removal of the API Monogram

Each licensee shall control the application and removal of the API Monogram in accordance with the following.

a) Products that do not conform to API specified requirements shall not bear the API Monogram.

b) Each licensee shall develop and maintain an API Monogram marking procedure that documents the marking/monogramming requirements specified by this annex and any applicable API product specification(s) and/or standard(s). The marking procedure shall:

   1) define the authority responsible for application and removal of the API Monogram and license number;

   2) define the method(s) used to apply the Monogram and license number;

   3) identify the location on the product where the API Monogram and license number are to be applied;

   4) require the application of the date of manufacture of the product in conjunction with the use of the API Monogram and license number;

   5) require that the date of manufacture, at a minimum, be two digits representing the month and two digits representing the year (e.g. 05–12 for May 2012) unless otherwise stipulated in the applicable API product specification(s) or standard(s);

   6) define the application of all other required API product specification(s) and/or standard(s) marking requirements.

c) Only an API licensee shall apply the API Monogram and its designated license number to API monogrammable products.

d) The API Monogram and license number, when issued, are site specific, and subsequently the API Monogram shall only be applied at that site-specific licensed facility location.

e) The API Monogram may be applied at any time appropriate during the production process but shall be removed in accordance with the licensee's API Monogram marking procedure if the product is subsequently found to be out of conformance with any of the requirements of the applicable API product specification(s) and/or standard(s) and API Monogram Program.

For certain manufacturing processes or types of products, alternative API Monogram marking procedures may be acceptable. Requirements for alternative API Monogram marking are detailed in the "API Monogram Program Alternative Marking of Products License Agreement," available on the API Monogram Program website at http://www.api.org/products-and-services/api-monogram-and-apiqr/apply-renew-modify.

A.3.3 Design and Design Documentation

Each licensee and/or applicant for licensing shall maintain current design documentation as identified in API Q1 for all of the applicable products that fall under the scope of each Monogram license. The design document information shall provide objective evidence that the product design meets the requirements of the applicable and most current API product specification(s) and/or standard(s). The design documentation shall be made available during API audits of the facility.

In specific instances, the exclusion of design activities is allowed under the Monogram Program, as detailed in Advisory # 6, available on API Monogram Program website at http://www.api.org/products-and-services/api-monogram-and-apiqr/advisories-updates.

A.3.4 Manufacturing Capability

The API Monogram Program is designed to identify facilities that have demonstrated the ability to manufacture equipment that conforms to API specifications and/or standards. API may refuse initial licensing or suspend current licensing based on a facility's level of manufacturing capability. If API determines that an additional review is warranted, API may perform additional audits (at the organization's expense) of any subcontractors to ensure their conformance with the requirements of the applicable API product specification(s) and/or standard(s).

A.3.5 Use of the API Monogram in Advertising

An API Monogram licensee shall not use the API Monogram and/or license number on letterheads, buildings, or other structures, websites, or in any advertising without an express statement of fact describing the scope of licensee's authorization (license number and product specification). The licensee should contact API for guidance on the use of the API Monogram other than on products.

A.4 Product Marking Requirements

A.4.1 General

These marking requirements shall apply only to those API licensees wishing to mark applicable products in conjunction with the requirements of the API Monogram Program.

A.4.2 Product Specification Identification

Manufacturers shall mark products as specified by the applicable API specifications or standards. Marking shall include reference to the applicable API specification and/or standard. Unless otherwise specified, reference to the API specifications and/or standards shall be, as a minimum, "API [Document Number]" (e.g. API 6A or API 600). Unless otherwise specified, when space allows, the marking may include use of "Spec" or "Std," as applicable (e.g. API Spec 6A or API Std 600).

A.4.3 Units

Products shall be marked with units as specified in the API specification and/or standard. If not specified, equipment shall be marked with the United States customary (USC) units. Use of dual units [USC units and metric (SI) units] may be acceptable, if such units are allowed by the applicable product specification and/or standard.

A.4.4 Nameplates

Nameplates, when applicable, shall be made of a corrosion-resistant material unless otherwise specified by the API specification and/or standard. Nameplate shall be located as specified by the API specification and/or standard. If the location is not specified, then the licensee shall develop and maintain a procedure detailing the location to which the nameplate shall be applied. Nameplates may be attached at any time during the manufacturing process.

The API Monogram and license number shall be marked on the nameplate, in addition to the other product marking requirements specified by the applicable product specification and/or standard.

A.4.5 License Number

The API Monogram license number shall not be used unless it is marked in conjunction with the API Monogram. The license number shall be used in close proximity to the API Monogram.

A.5 API Monogram Program: Nonconformance Reporting

API solicits information on products that are found to be nonconforming with API specified requirements, as well as field failures (or malfunctions), which are judged to be caused by either specification and/or standard deficiencies or nonconformities against API specified requirements. Customers are requested to report to API all problems with API monogrammed products. A nonconformance may be reported using the API Nonconformance Reporting system available at http://compositelist.api.org/ncr.aspx.

Annex B
(normative)

Manufacturing Procedure Qualification for PSL 2 Pipe

B.1 Introduction

B.1.1 This annex specifies additional provisions that apply if manufacturing procedure qualification is ordered for PSL 2 pipe [see 7.2 c) 43)] or if Annex H and/or if Annex J applies.

B.1.2 In special cases (e.g. first supply or new steel grade) the purchaser may, when ordering large quantities, ask for data demonstrating that the requirements specified in this specification can be met using the proposed manufacturing route.

B.1.3 Verification of the manufacturing procedure shall be by the provision of acceptable data from previous production or by qualification in accordance with B.3, B.4, B.5 or any portion or combination thereof.

B.2 Additional Information to Be Supplied by the Purchaser

The purchase order shall indicate which of the following provisions apply for the specific order item:

a) qualification in accordance with B.3, B.4, B.5 or any portion or any combination thereof (see B.1.3);

b) frequency and amount of testing (see B.5.2).

B.3 Characteristics of the Manufacturing Procedure Specification

Before production commences or at the manufacturer's risk from the initial production run, the manufacturer shall supply the purchaser with summary information or identification of the control documents, as applicable, on the main characteristics of the manufacturing procedure. This information shall include at least the following.

a) Steelmaking and casting—for all pipe:

1) name/location of manufacturing facility;

2) equipment and process description including steelmaking method, heat size, deoxidation practice, inclusion shape control practices (where applicable), and casting method;

3) chemical composition ranges including each element intentionally added and those listed in Table 5;

4) steelmaking and casting process control;

5) hydrogen control practices for slabs used to make plate/coil greater than 20 mm (0.78 in.) thick;

6) product identification and traceability practices;

7) product rework/retest/release controls for nonconformances with manufacturer's documented practices including grade intermixes/transitions and process/chemistry deviations;

8) centerline segregation controls and acceptance criteria, as applicable.

b) Pipe manufacturing—for all pipe:

1) name/location of manufacturing facility;

2) equipment and process description;

3) hydrostatic testing practices including calibration/verification of equipment;

4) nondestructive inspection methods and practices including instrument standardization practices;

5) chemical/mechanical property test and retest sample location(s) and specimen specification;

6) dimensional control methods including methods to straighten pipe or correct dimensions;

7) for full-body normalized and quenched and tempered pipe, the aim and control tolerances for the austenitizing and tempering times and temperatures and a description of the temperature monitoring and control methods;

8) pipe marking process and details;

9) product traceability practices from plate/coil/billet receipt to pipe release;

10) product rework/retest/release controls for nonconformances with manufacturer's documented practices;

11) pipe storage, handling, loading, and shipping practices.

c) Hot rolling—for welded pipe:

1) name/location of manufacturing facility;

2) equipment and process description including heat treatment method (N or Q) if applicable;

3) applicable rolling practice control temperature tolerances (reheating, rolling, and cooling);

4) applicable time tolerances (reheating, rolling, and cooling);

5) applicable nondestructive inspection methods and practices for the coil/plate including instrument standardization practices;

6) dimensional and mechanical property control limits;

7) end cropping practices;

8) product traceability practices from slab receipt to plate/coil delivery;

9) product rework/retest/release controls for nonconformances with manufacturer's documented practices (including process, chemical/mechanical, and dimensional deviations);

10) storage, handling, loading, and shipping practices.

d) Secondary processing (if applicable)—for welded pipe:

1) name/location of manufacturing facility;

2) equipment and process description;

3) product identification and traceability practices from plate/coil receipt to plate/coil delivery;

4) product rework/recoil/retest/release controls for nonconformances with manufacturer's documented practices (including process, chemical/mechanical, and dimensional deviations);

5) storage, handling, loading, and shipping practices.

e) Pipe manufacture—for welded pipe:

1) pipe-forming procedures including preparation of edges, control of alignment, and shape;

2) pipe heat treatment procedure, where applicable, including in-line heat treatment of the weld seam;

3) WPS with previous qualification records for this procedure, if available; this shall include sufficient information of the following kind:

i) for HFW seam welding:

a) confirmation of adequate weld seam heat treatment through metallography;

b) description and controls of welding process;

ii) for SAW and COW seam, repair, coil/plate end, and jointer welding, as applicable:

a) wire/flux consumable manufacturer(s), classification, and wire diameter(s);

b) welding parameters and ranges including current, voltage, travel speed, and heat input;

4) for SAW and COW pipe:

i) seam welding bevel dimensional tolerances;

ii) method of tack welding and spacing of tack welds (if applicable);

iii) procedures for wire and flux storage and handling including moisture control and practices for recycling flux, as applicable;

iv) weld defect removal methods.

f) Pipe manufacture—for SMLS pipe:

1) pipe-forming process for as-rolled pipe:

i) applicable rolling practice control temperature tolerances (reheating, rolling, and cooling);

ii) applicable time tolerances (reheating, rolling, and cooling);

2) pipe heat treatment practice.

B.4 Characteristics of the Inspection and Test Plan

Before production commences, the manufacturer shall supply the purchaser with summary information or identification of the control documents, as applicable, on the main characteristics of the inspection and test plan. This plan shall include at least the following:

a) inspection activity;

b) organization or individuals responsible for performing the inspection activity (including manufacturer, subcontractor, purchaser, or third-party representative);

c) inspection/test and calibration practices, as applicable;

d) frequency of inspection;

e) acceptance criteria;

f) actions to nonconformances;

g) result recording, as applicable;

h) identification of processes requiring validation;

i) witness and hold points.

B.5 Manufacturing Procedure Qualification Tests

B.5.1 For the qualification of the manufacturing procedure, the mandatory tests specified in Table 18, Table H.3, and/or Table J.7, whichever are applicable, shall be carried out prior to or at the beginning of the production.

B.5.2 The frequency and amount of qualification testing shall be as specified in the purchase order, although requalification testing shall be approved by the purchaser. The manufacturer may offer prequalification data from previous production if noted in the purchase order.

B.5.3 For welded pipe, at a minimum the following welding procedure qualification information shall be provided.

a) For HFW pipe:

   1) welding process control parameters;

   2) weld mechanical test results in accordance with Tables 18, H.3, and J.7 (as appropriate);

   3) confirmation of adequate heat treatment through metallography;

   4) weld region hardness test results where required in accordance with H.7.2.4 and H.7.3.3 or J.8.2.3 and J.8.3.2.

b) For SAW and COW pipe:

   1) bevel dimensions;

   2) wire/flux consumable manufacturer(s), classification, and wire diameter(s);

3) welding parameters including current, voltage, travel speed, heat input, and number of arcs;

4) weld mechanical test results in accordance with Tables 18, H.3, and J.7 (as appropriate);

5) weld region hardness test results where required in accordance with H.7.2.4 and H.7.3.3 or J.8.2.3 and J.8.3.2;

6) weld metal chemical analysis of each deposited bead.

B.5.4 The purchaser may ask for characteristic data on other properties (e.g. weldability) of the product.

NOTE Purchaser requests for weldability data on particular steel grades can require specific weldability testing to be conducted; in such instances, it is the responsibility of the purchaser to supply the manufacturer with details of the welding processes and parameters for which weldability data are required; it is important to consider weldability testing of newly developed steel grades such as L690 or X100 and L830 or X120 where data are otherwise unavailable.

B.5.5 This qualification shall consider an assessment of coil/plate tensile property variability and coil/plate to pipe strength changes.

B.5.6 Prior to release of pipe, the purchaser shall be notified of each plate/coil/pipe that does not meet the initial defined rolling practices control parameters but have been requalified (see 8.3.9).

Annex C
(normative)

Treatment of Surface Imperfections and Defects

C.1 Treatment of Surface Imperfections

Surface imperfections not classified as defects may remain in the pipe without repair or may be cosmetically dressed-out by grinding.

C.2 Treatment of Dressable Surface Defects

C.2.1 All dressable surface defects shall be dressed-out by grinding.

C.2.2 Grinding shall be carried out in such a way that the dressed area blends in smoothly with the contour of the pipe.

C.2.3 Complete removal of defects shall be verified by local visual inspection, aided, where necessary, by suitable nondestructive inspection methods. To be acceptable, the wall thickness in the ground area shall be in accordance with 9.11.3.2; however, the minus tolerances for diameter and out-of-roundness (see 9.11.3.1) shall not apply in the ground area.

C.3 Treatment of Nondressable Surface Defects

Pipe that contains nondressable surface defects shall be given one or more of the following dispositions:

a) weld defects in SAW and COW pipe shall be repaired by welding in accordance with C.4;

b) the sections of pipe containing the surface defects shall be cut off, within the limits on length; or

c) the entire pipe length shall be rejected.

C.4 Repair of Defects by Welding

C.4.1 For PSL 1 pipe only, repair of the pipe body by welding is permitted. For PSL 2 pipe, repair of the pipe body by welding is not permitted.

C.4.2 Except as allowed by C.4.1, repair by welding shall be confined to the weld of SAW and COW pipe. The defect shall be completely removed and the resulting cavity shall be thoroughly cleaned. For PSL 2 pipe, the rim of the resulting cavity shall not extend into the parent metal by more than 3.2 mm (0.125 in.), as measured along the pipe surface perpendicular to the weld (see Figure C.1). Unless otherwise agreed, repairs to welds in cold-expanded PSL 2 pipe shall have been performed prior to cold expansion. Seam welds made without filler metal shall not be repaired by welding.

C.4.3 The total length of repaired zones on each pipe weld shall be ≤ 5 % of the total weld length for SAW and COW weld seams. For coil/plate end welds, the total length of the repaired zone shall not exceed 100 mm (4.0 in.) and shall not be within 100 mm (4.0 in.) of the junction between the end weld and the helical seam weld.

C.4.4 Weld defects separated by less than 100 mm (4.0 in.) shall be repaired as a continuous single weld repair. Each single repair shall be carried out with a minimum of two layers/passes over a length of at least 50 mm (2.0 in.).

C.4.5 Weld repairs shall be performed using a welding procedure that is qualified in accordance with Annex D.

C.4.6 After weld repair, the total area of the repair shall be ultrasonically or radiographically inspected in accordance with Annex E and, if applicable, Annex K. Before expansion or hydrotest, the type of ultrasonic testing (UT) may be at the option of the pipe manufacturer; however, after expansion or hydrotest, inspection shall be by manual UT. It would also be acceptable to carry out combined automatic and manual UT after expansion or hydrotest.

C.4.7 For SMLS pipe (PSL 1 only), prior to weld repair, magnetic particle testing (MT) or penetrant testing (PT) inspection shall be performed to ensure complete removal of defect.

C.4.8 Pipe that has been repair welded shall be hydrostatically tested after repair welding in accordance with 10.2.6.

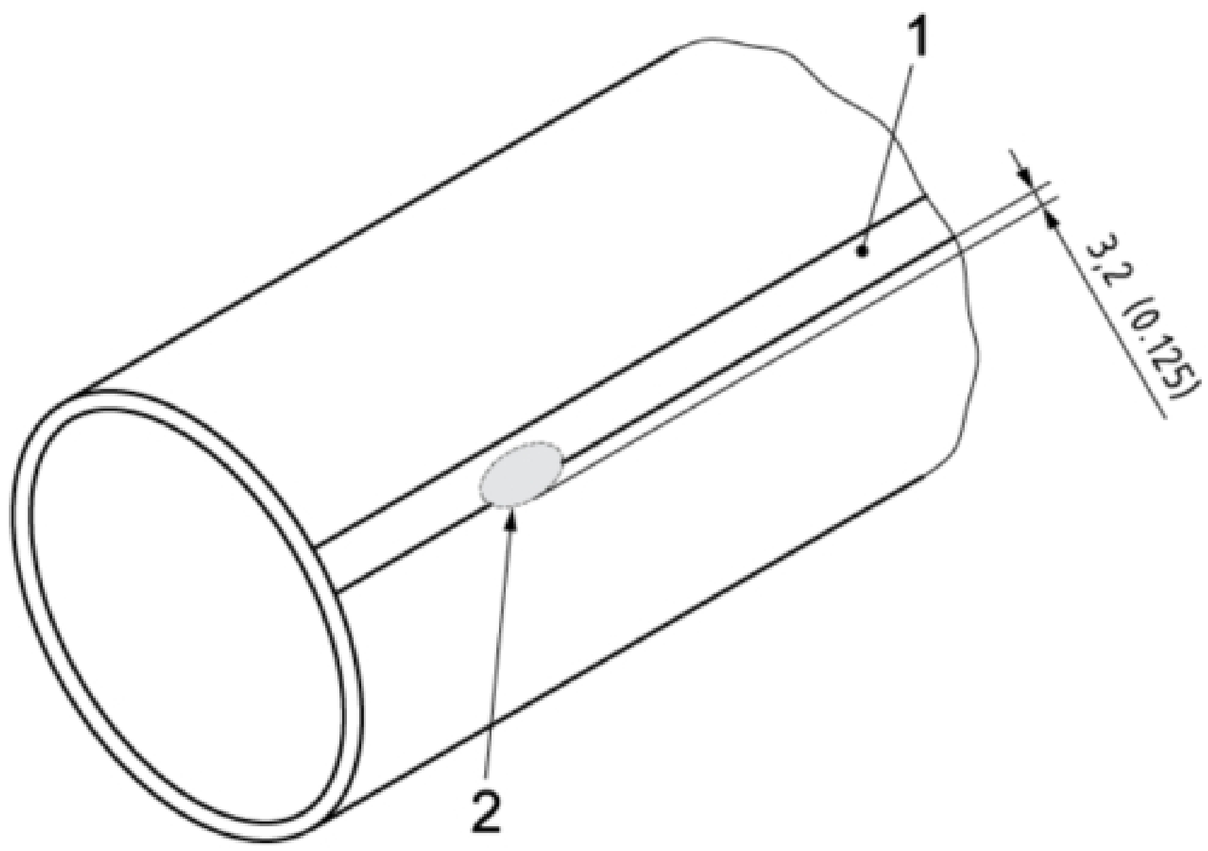

Key

1 weld reinforcement
2 rim of resultant cavity

Figure C.1—Resultant Cavity of Weld Repair (PSL 2 Only)

Annex D
(normative)

Repair Welding Procedure

D.1 General

D.1.1 Repair welds shall be made:

a) with the pipe axis being in the horizontal plane,

b) in accordance with a qualified welding procedure, and

c) by a welding machine operator (hereafter called operator) or repair welder who is qualified in accordance with D.3.

D.1.2 Repair welds shall be made by one or more of the following methods:

a) automatic submerged arc,

b) automatic or semi-automatic gas metal arc, or

c) manual shielded metal arc using low-hydrogen electrodes.

D.1.3 All welding materials shall be properly handled and stored in accordance with the manufacturer's recommendations, so as to preclude moisture or other contamination.

D.1.4 Test welds shall be made on strip, plate, or pipe.

D.1.5 The manufacturer shall maintain a record of the welding procedure and the procedure qualification test results. Copies of the WPS and the welding procedure qualification record shall be provided to the purchaser upon request.

D.2 Repair Welding Procedure Qualification

D.2.1 General

D.2.1.1 Welding procedures shall be qualified by preparing and testing welds in accordance with this annex, except as allowed by D.2.1.2.

D.2.1.2 At the option of the manufacturer, the welding procedure qualification mechanical tests specified in ISO 15614-1 [23], API 5L 43rd Edition [17], or ASME Section IX [26] may be substituted for those specified in D.2.3.

D.2.1.3 For the purpose of this annex, the term "automatic welding" includes machine welding, mechanized welding, and automatic welding.

D.2.2 Essential Variables

An existing procedure shall not be applicable and a new procedure shall be qualified if any of the following essential variables is changed beyond the stated limits.

a) Welding process:

1) a change in the welding process, such as submerged arc to gas metal arc, or

2) a change in the method, such as manual to semi-automatic.

b) Pipe material:

1) a change in pipe grade category; if different alloying systems are used within one pipe grade category, each alloying composition shall be separately qualified, wherein pipe grade categories are as follows:

i) pipe Grade ≤ L290 or X42,

ii) pipe Grade > L290 or X42, and pipe Grade < L450 or X65,

iii) each pipe Grade ≥ Grade L450 or X65;

2) within each pipe grade category, a thicker material than the material qualified;

3) within the pipe grade category and thickness range, a carbon equivalent (CE_{IIW} if the carbon mass fraction is greater than 0.12 % and CE_{Pcm} if the carbon mass fraction is less than or equal to 0.12 %), based on product analysis for the material to be repaired, that is more than 0.03 % greater than the carbon equivalent of the material qualified; or

4) change in delivery condition (see Table 3).

c) Welding materials:

1) change in the filler metal classification;

2) when impact tests are required, a change in the consumable brand name;

3) change in the electrode diameter;

4) change in the composition, X, of the shielding gas of more than ($X \pm 5$) %;

5) change in the flow rate, q, of the shielding gas of more than ($q \pm 10$) %; or

6) change in submerged arc welding flux from one designation to another.

d) Welding parameters:

1) change in the type of current (such as from alternating current to direct current);

2) change in polarity;

3) for automatic and semi-automatic welding, the ranges of welding current, voltage, speed, and heat input may be established to cover ranges of wall thickness. Within the range, appropriately

selected points shall be tested to qualify the entire range. Thereafter, a new qualification is required if there is a deviation from the qualified range greater than one or more of the following:

i) 10 % in amperage,

ii) 7 % in voltage,

iii) 10 % in travel speed for automatic welding,

iv) 10 % in heat input; or

4) any increase in groove depth, a, over that qualified. The depth of groove shall be set by the manufacturer, unless otherwise agreed.

e) Weld bead: for manual and semi-automatic welding, a change in bead width greater than 50 %;

f) Preheat and post-weld heat treatment:

1) repair welding at a pipe temperature lower than the pipe temperature of the qualification test, or

2) the addition or deletion of post-weld heat treatment.

D.2.3 Mechanical Testing

D.2.3.1 Number of Test Pieces

Two test pieces for each type of test (see D.2.3.2 and D.2.3.3) shall be prepared and tested for each welding procedure qualification test. For impact testing, three test pieces for each location shall be prepared and tested (see D.2.3.4).

D.2.3.2 Transverse Tensile Test

D.2.3.2.1 The reduced width of transverse tensile test pieces shall be 38 mm (1.5 in.) and the repair weld shall be at the mid-length of the test piece, as shown in Figure 8 a). The weld reinforcement shall be removed from both faces and the longitudinal edges shall be machine cut.

NOTE Although Figure 8 a) shows a guided-bend test specimen, it is referred to for guidance of where the repair weld is to be located for a tensile specimen.

D.2.3.2.2 The tensile strength shall be at least equal to the minimum specified for the applicable pipe grade.

D.2.3.3 Transverse Guided-bend Test

D.2.3.3.1 The transverse guided-bend test pieces shall be as shown in Figure D.1, with the weld having been made in a groove.

D.2.3.3.2 Each test piece shall be bent 180° in a jig (see Figure 9 and Table D.1), with the exposed surface of the weld in tension.

D.2.3.3.3 Except as allowed by D.2.3.3.4, the bend test shall be considered acceptable if no crack or other defect exceeding 3.2 mm (0.125 in.) in any direction is present in the weld metal or base metal after bending.

D.2.3.3.4 Cracks that occur at the edges of the test piece during testing shall not be cause for rejection, provided that they are not longer than 6.4 mm (0.250 in.).

D.2.3.4 Charpy (CVN) Impact Test

D.2.3.4.1 Charpy impact test pieces shall be taken from weld-repaired areas of repair welding procedure qualification tests (see D.2.1.1).

D.2.3.4.2 Charpy test pieces shall be prepared in accordance with the requirements of 10.2.3.3 of this specification.

D.2.3.4.3 The CVN impact test shall be carried out in accordance with the requirements of 9.8 and 10.2.4.3 of this specification.

D.2.3.4.4 The minimum average absorbed energy (of a set of three test pieces) for each repaired pipe weld and its associated HAZ, based on full-size test pieces and a test temperature of 0 °C (32 °F) or, if agreed, a lower test temperature, shall be not less than that specified in 9.8.3 for the pipe seam weld metal and HAZ.

Where pipe dimensions do not permit the preparation and testing of full-size CVN test pieces from repair welding procedure qualification tests and sub-size CVN test pieces are used, the requirements of 10.2.3.3 and Table 22 shall apply.

D.2.4 NDT of Weld Repair Procedure Qualification Test

The weld repair procedure qualification test piece shall be inspected in accordance with E.3, by using either the radiographic inspection technique in accordance with E.4 or the ultrasonic inspection technique in accordance with E.5 or a combination of both techniques. The weld-repaired area shall meet the same acceptance criteria specified in E.4.5 and/or E.5.5 as appropriate.

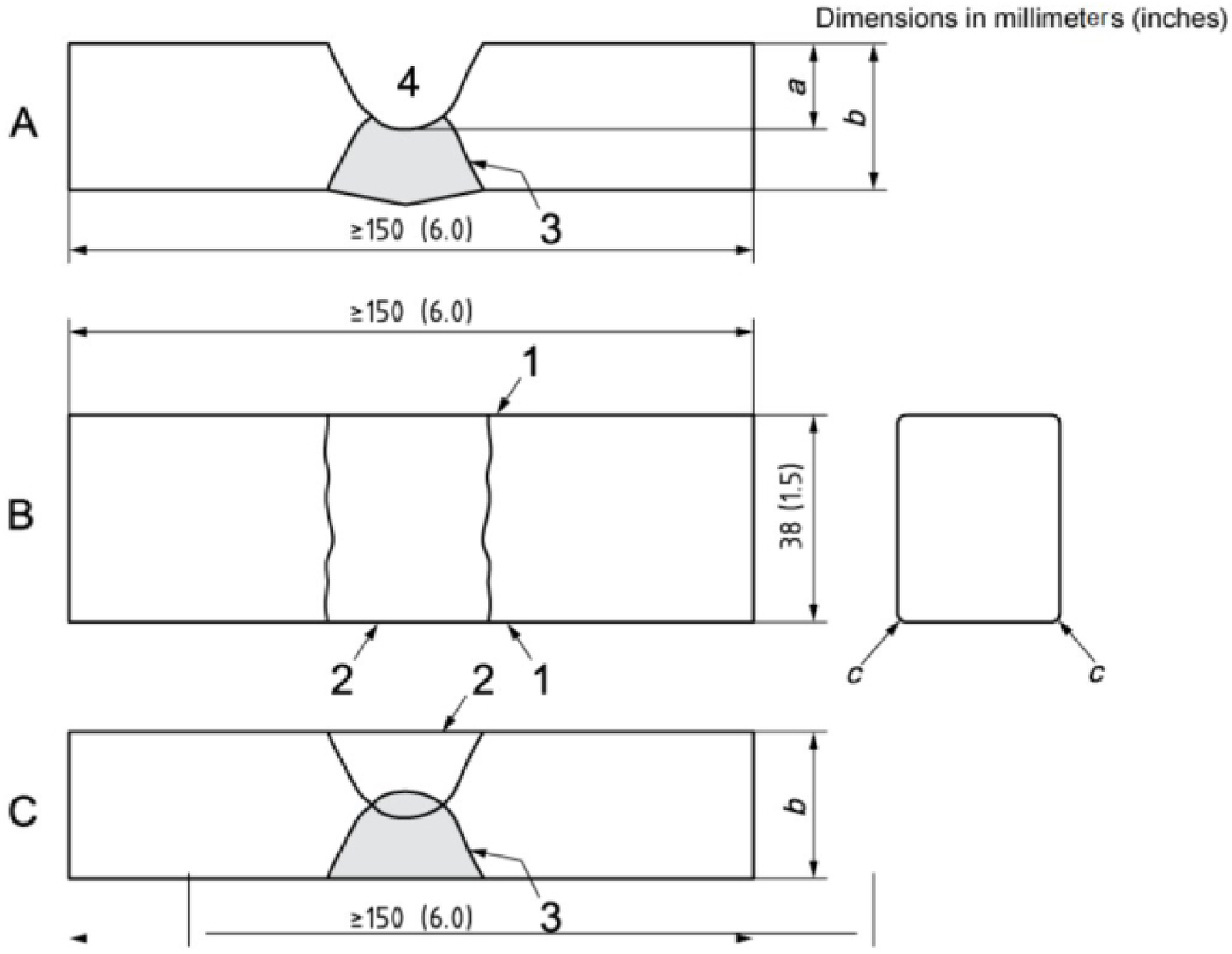

Key

A before repair welding – Section view
B after repair welding – Plan view
C after repair welding – Section view
1 longitudinal edges machined, cold sawn, thermally cut, or any combination thereof
2 repair weld metal with weld reinforcement removed
3 pre-existing SAW/COW weld (if applicable) with weld reinforcement removed
4 repair groove

[a] Groove depth.
[b] Wall thickness (see D.2.2 b) 2).
[c] The radius, *r*, shall be less than or equal to 1.6 (0.063).

Figure D.1—Guided-bend Test Piece

Table D.1—Guided-bend Test Jig Dimensions

Pipe Grade	Dimension [a] mm (in.)			
	r_a [b]	r_b [b]	A_{gb} [b]	B [b]
≤ L290 or X42	3.0t	4.0t + 1.6 (0.063)	6.0t	8.0t + 3.2 (0.125)
L320 or X46	3.5t	4.5t + 1.6 (0.063)	7.0t	9.0t + 3.2 (0.125)
L360 or X52	4.0t	5.0t + 1.6 (0.063)	8.0t	10.0t + 3.2 (0.125)
L390 or X56	4.0t	5.0t + 1.6 (0.063)	8.0t	10.0t + 3.2 (0.125)
L415 or X60	4.5t	5.5t + 1.6 (0.063)	9.0t	11.0t + 3.2 (0.125)
L450 or X65	4.5t	5.5t + 1.6 (0.063)	9.0t	11.0t + 3.2 (0.125)
L485 or X70	5.0t	6.0t + 1.6 (0.063)	10.0t	12.0t + 3.2 (0.125)
L555 or X80	5.0t	6.0t + 1.6 (0.063)	10.0t	12.0t + 3.2 (0.125)
L620 or X90	5.5t	6.5t + 1.6 (0.063)	11.0t	13.0t + 3.2 (0.125)
L690 or X100	6.0t	7.0t + 1.6 (0.063)	12.0t	14.0t + 3.2 (0.125)
L830 or X120	7.0t	8.0t + 1.6 (0.063)	14.0t	16.0t + 3.2 (0.125)

[a] For intermediate grades, the dimensions shall be as specified for the next lower grade, or shall be obtained by interpolation.

[b] r_a, r_b, A_{gb}, and B are as shown in Figure 9.

D.3 Welding Personnel Performance Qualification

D.3.1 Qualification

D.3.1.1 General

Each repair welder and operator shall be qualified according to the requirements of this section. Alternatively, at the option of the manufacturer, welders and operators may be qualified to ISO 9606-1 [25], ASME Section IX [26], API 5L 43rd Edition [17], Appendix C, or EN 287-1 [24].

A repair welder or operator qualified on one pipe grade category [see D.2.2 b)] is qualified for any lower pipe grade category, provided that the same welding process is used.

D.3.1.2 Inspection

To qualify, a repair welder or operator shall produce welds that are acceptable by inspection as follows:

a) film radiographic inspection in accordance with Annex E,

b) two transverse guided-bend tests (see D.2.3.3).

D.3.1.3 Inspection Failures

If one or more of the inspections in D.3.1.2 fail to meet the specified requirements, the welder or operator may make one additional qualification weld. If that weld fails one or more of the inspections in D.3.1.2, the welder or operator is disqualified. No further retests shall be permitted until the welder has completed additional training.

D.3.2 Re-qualification

Re-qualification in accordance with D.3.1 shall be required if one or more of the following applies:

a) one year has elapsed since the last prior applicable qualification;

b) the welder or operator has not been welding using qualified procedures for a period of 3 months or more; or

c) there is reason to question the welder's or operator's ability.

Annex E
(normative)

Nondestructive Inspection for Pipe Not Required to Meet Annex H, J, or N

E.1 Qualification of Personnel

E.1.1 ISO 9712, ISO 11484, or ASNT SNT-TC-1A or an equivalent shall be the basis for the qualification of nondestructive inspection personnel (excluding visual inspection). Such personnel shall be re-qualified for any method previously qualified, if they have not performed nondestructive inspection in that method for a period exceeding 12 months.

E.1.2 Nondestructive inspection shall be conducted by Level 1, 2, or 3 personnel.

E.1.3 Evaluation of indications shall be performed by Level 2 or 3 personnel, or by Level 1 personnel under the supervision of Level 2 or 3 personnel.

E.2 Standard Practices for Inspection

Except as specifically modified in this annex, the required nondestructive inspection, other than for surface inspection (see 10.2.7) and wall thickness verification, shall be performed in accordance with one of the following standards or an equivalent:

a)	electromagnetic (flux leakage):	ISO 10893-3 or ASTM E570;
b)	electromagnetic (eddy current):	ISO 10893-2 or ASTM E309;
c)	ultrasonic:	ISO 10893-8, ISO 10893-9, ISO 10893-10, ASTM A435, ASTM A578, or ASTM E213;
d)	automated ultrasonic (weld seam):	ISO 10893-11 or ASTM E273;
e)	manual ultrasonic (weld seam):	ISO 10893-11, ASTM E164, ASTM E587;
f)	magnetic particle:	ISO 10893-5 or ASTM E709;
g)	radiographic (film):	ISO 10893-6 or ASTM E94;
h)	radiographic (digital):	ISO 10893-7, ASTM E2698, or ASTM E2033;
i)	liquid penetrant:	ISO 10893-4 or ASTM E165.

E.3 Methods of Inspection

E.3.1 General

E.3.1.1 For grades ≥ L210 or A, the weld seams of welded pipe with D ≥ 60.3 mm (2.375 in.) shall be nondestructively inspected, full length (100 %) for the entire thickness, as given in Table E.1. In addition, the coil/plate end weld in finished helical seam pipe shall be nondestructively inspected, full length (100 %) for the entire thickness, as given in Table E.1.

Table E.1—Pipe Weld Seam Nondestructive Inspection

Weld Seam Type	Nondestructive Inspection Method [a]		
	Electromagnetic	Ultrasonic	Radiographic
EW	One method or a combination of methods is required		Not applicable
LW	Not applicable	Required	Not applicable
SAW	Not applicable	Required [b]	If agreed
COW	Not applicable	Required	Not applicable
Coil/plate end	Not applicable	Required [b]	If agreed

[a] The weld seam at the pipe ends may require additional inspection (see E.3.2).

[b] Required unless the manufacturer and the purchaser have agreed to replace it by radiographic inspection.

E.3.1.2 All PSL 2 SMLS pipe and PSL 1 Grade L245 or B quenched and tempered SMLS pipe shall be nondestructively inspected full length (100 %), as given in Table E.2. If agreed, other PSL 1 SMLS pipe shall be nondestructively inspected as given in Table E.2.

Table E.2—SMLS Pipe Body Nondestructive Inspection

Item	Nondestructive Inspection Method		
	Electromagnetic	Ultrasonic	Magnetic Particle (Circular Field)
PSL 2 pipe, any grade	One method or a combination of methods is required		
PSL 1 pipe, Grade L245 or B, quenched and tempered	One method or a combination of methods is required		
PSL 1 pipe, other than above	If agreed, one method or a combination of methods is required		

E.3.1.3 The location of equipment in the manufacturer's facility shall be at the discretion of the manufacturer, except that:

a) the required nondestructive inspection of weld seams of cold-expanded pipe shall take place after cold expansion; the required nondestructive inspection of SMLS pipe shall take place after each heat treating and cold-expansion operations, if performed, but may take place before cropping, beveling, and end sizing;

b) by agreement, the weld seams in LFW and HFW pipe shall be inspected following hydrostatic test.

E.3.2 Pipe End Inspection—Welded Pipe

E.3.2.1 If an automated ultrasonic or electromagnetic inspection system is applied to meet the requirements of E.3.1.1, the weld at any pipe end not covered by the automated inspection system shall be inspected for defects by the manual or semi-automatic ultrasonic angle beam method or by the radiographic method, whichever is appropriate, or such noninspected pipe end shall be cut off. Records in accordance with E.5.4 shall be maintained.

E.3.2.2 For SAW and COW pipe, the weld at each pipe end for a minimum distance of 200 mm (8.0 in.) shall be inspected by the radiographic method. The results of such radiographic inspection shall be recorded on either film or another imaging medium.

E.3.2.3 If agreed, ultrasonic inspection in accordance with the method described in ASTM A578 and ASTM A435, or ISO 10893-8 shall be used to verify that the 25 mm (1.0 in.) wide zone at each pipe end is free of laminar imperfections > 6.4 mm (0.25 in.) in the circumferential direction.

E.3.3 Pipe End Inspection—SMLS Pipe

E.3.3.1 If an automated ultrasonic or electromagnetic inspection system (combined equipment, operating procedures, and personnel) is applied to meet the requirements of E.3.1.2, the portion at the pipe end that is not covered by the automated inspection system shall be inspected for defects by the manual or semi-automatic ultrasonic angle beam method or the magnetic particle method, otherwise such noninspected pipe ends shall be cut off. Records in accordance with E.5.4 shall be maintained.

E.3.3.2 If agreed for pipe with $t \geq 5.0$ mm (0.197 in.), ultrasonic inspection in accordance with ISO 10893-8 or ASTM A578 and ASTM A435 shall be used to verify that the 25 mm (1.0 in.) wide zone at each pipe end is free of laminar imperfections > 6.4 mm (0.25 in.) in the circumferential direction.

E.4 Radiographic Inspection of Weld Seams

E.4.1 Radiographic Technique

When applicable, radiographic inspection of the weld seam shall be conducted in accordance with the following:

a) for film radiographic inspection: ISO 10893-6 image quality class A or B, or ASTM E94;

b) for digital radiographic inspection: ISO 10893-7, ASTM E2698, or ASTM E2033.

E.4.2 Radiographic Inspection Equipment

E.4.2.1 The homogeneity of weld seams examined by radiographic methods shall be determined by means of X-rays directed through the weld material in order to create a suitable image on a radiographic film or digital imaging medium (i.e. CR, DDA), provided that the required sensitivity is demonstrated.

E.4.2.2 The radiographic films used shall be in accordance with ISO 11699-1:2008, class C4 or C5, or ASTM E1815-08, class I or class II, and shall be used with lead screens.

E.4.2.3 The density of the radiograph shall be not less than 2.0 (excluding the weld seam) and shall be chosen such that:

a) the density through the thickest portion of the weld seam is not less than 1.5, and

b) the maximum contrast for the type of film used is achieved.

E.4.3 IQIs

E.4.3.1 Unless otherwise agreed, wire-type IQIs shall be used. If other standard IQIs are used, equivalent or better sensitivity shall be achieved.

E.4.3.2 If ISO wire-type IQIs are used, they shall be W 1 FE, W 6 FE, or W 10 FE, in accordance with ISO 19232-1:2004, and the essential wire diameters shall be as given in Table E.3 for the applicable weld thickness.

E.4.3.3 If ASTM wire-type IQIs are used, they shall be in accordance with ASTM E747, and the essential wire diameters shall be as given in Table E.4 for the applicable weld thickness.

E.4.3.4 Except as allowed by E.4.3.5, the IQI used shall be placed across the weld at a location representative of full weld reinforcement and shall contain both essential wire diameters, with one being determined based on the weld thickness with full reinforcement and the other being determined based on the weld thickness without reinforcement.

E.4.3.5 Two IQIs may be used—one placed across the weld and the other placed on the parent metal.

E.4.3.6 IQIs shall be placed on the source side. When the source side is inaccessible, the IQIs may be placed on the film/detector side of the object. In these circumstances a letter "F" shall be placed near the IQIs, and this procedural change shall be recorded in the test report.

NOTE A trial exposure with IQIs on both source and detector sides of a piece of pipe is an effective means to assess relative sensitivity.

Table E.3—ISO Wire-type IQI for Radiographic Inspection

Weld Thickness [a] mm (in.)	**Essential Wire Diameter** mm (in.)	**FE Wire Set**	**Wire Number**
≤ 8 (0.3)	0.16 (0.006)	W 10 to W 16	14
> 8 (0.3) to 11 (0.4)	0.20 (0.008)	W 10 to W 16	13
> 11 (0.4) to 14 (0.6)	0.25 (0.010)	W 10 to W 16 or W 6 to W 12	12
> 14 (0.6) to 18 (0.7)	0.32 (0.013)	W 10 to W 16 or W 6 to W 12	11
> 18 (0.7) to 25 (1.0)	0.40 (0.016)	W 10 to W 16 or W 6 to W 12	10
> 25 (1.0) to 32 (1.2)	0.50 (0.020)	W 6 to W 12	9
> 32 (1.2) to 41 (1.6)	0.63 (0.025)	W 6 to W 12	8
> 41 (1.6) to 50 (2.0)	0.80 (0.032)	W 6 to W 12	7
> 50 (2.0)	1.00 (0.039)	W 6 to W 12	6

[a] The weld thickness is the sum of the specified wall thickness and the estimated thickness of the weld reinforcement.

Table E.4—ASTM Wire-type IQI for Radiographic Inspection

Weld Thickness [a] mm (in.)	**Essential Wire Diameter** mm (in.)	**Wire Set**	**Wire Identity**
≤ 8 (0.3)	0.16 (0.006)	A	4
> 8 (0.3) to 11 (0.4)	0.20 (0.008)	A	5
> 11 (0.4) to 14 (0.6)	0.25 (0.010)	A or B	6
> 14 (0.6) to 18 (0.7)	0.33 (0.013)	B	7
> 18 (0.7) to 25 (1.0)	0.41 (0.016)	B	8
> 25 (1.0) to 32 (1.2)	0.51 (0.020)	B	9
> 32 (1.2) to 41 (1.6)	0.64 (0.025)	B	10
> 41 (1.6) to 50 (2.0)	0.81 (0.030)	B or C	11
> 50 (2.0)	1.02 (0.040)	C	12

[a] The weld thickness is the sum of the specified wall thickness and the estimated thickness of the weld reinforcement.

E.4.4 Verification of Instrument Standardization

E.4.4.1 For dynamic methods at operational speeds, an IQI shall be used to verify the sensitivity and adequacy of the technique on one pipe in each test unit of not more than 50 pipes, but at least once per 4 hours per operating shift.

NOTE 1 Proper definition and sensitivity is attained when the essential wire diameters of the IQI used are clearly visible to the operator in the applicable area (weld or parent metal).

NOTE 2 In some of the referenced ISO standards for nondestructive inspection, the term “calibration” is used to denote the term “standardization” as used in this specification.

For initial adjustment of the technique using the IQI, the pipe may be held in a stationary position.

E.4.4.2 For film radiographic methods, an IQI shall appear on each exposure.

E.4.4.3 For stationary digital radiographic systems and processes, it is sufficient to prove the image quality twice per shift. This sensitivity check shall be carried out at least once in each 4-hour period and at the start and end of each inspection shift, as long as pipe dimensions and material and testing parameters remain unchanged between calibrations. Once the system achieves the requirements of E.4.3, no alteration to the testing parameters is allowed. The image quality check shall only be performed with source-side IQIs. During initial system validation, the spatial resolution (SRb) of the detector shall be determined with a duplex wire IQI in addition to the IQI in E.4.3. The duplex wire shall be positioned directly in front of the detector at approximately 5° angle to avoid the aliasing effects. IQI placement for system validation shall be on the same side as used during production testing.

If there are any required changes to the system testing parameters (e.g. voltage, current, exposure time, or distance between detector and subject) or changes to the pipe dimensions or material under test during the inspection shift, then the sensitivity of the system shall be re-calculated by the re-application of the required IQIs according to the requirements of E.4.3.

Where the image quality fails to meet the requirements of E.4.3, then each pipe inspected since the previous successful sensitivity check shall undergo radiographic re-inspection at the new test parameters.

E.4.5 Acceptance Limits for Imperfections Found by Radiographic Inspection

The size and distribution of slag-inclusion-type and/or gas-pocket-type imperfections shall not exceed the values given in Table E.5 or E.6, with elongated inclusions defined as those with length:width ratio of greater than or equal to 3:1.

NOTE 1 The important factors to be considered in determining if imperfections are acceptable are the size and spacing of the imperfections and the sum of their diameters in an established distance; for simplicity, the distance is established as any 150 mm (6.0 in.) length of weld where imperfections of this type usually occur in an aligned pattern, but no distinction is made between aligned and scattered patterns; also, the distribution pattern can be of assorted sizes.

NOTE 2 Unless the imperfections are elongated, it cannot be determined with assurance whether the radiological indications represent slag inclusions or gas pockets; therefore, the same limits apply to each circular-type imperfection.

E.4.6 Defects Found by Radiographic Inspection

Cracks, lack of complete penetration, and lack of complete fusion found by radiographic inspection shall be classified as defects. Imperfections found by radiographic inspection that are greater in size and/or distribution than the values given in Table E.5 or E.6, whichever is applicable, shall be classified as defects. Pipe containing such defects shall be given one or more of the dispositions specified in E.10.

E.4.7 Traceability of Radiographic Images

Radiographic images shall be traceable to the applicable pipe identity.

Table E.5—Elongated Slag-inclusion-type Imperfections

Maximum Dimensions mm (in.)	Separation min mm (in.)	Number of Imperfections in Any 150 mm (6.0 in.) Length of Weld max	Accumulated Length of Imperfections in Any 150 mm (6.0 in.) Length of Weld max mm (in.)
1.6 (0.063) × 13 (0.50)	150 (6.0)	1	13 (0.50)
1.6 (0.063) × 6.4 (0.25)	75 (3.0)	2	13 (0.50)
1.6 (0.063) × 3.2 (0.125)	50 (2.0)	3	13 (0.50)

Table E.6—Circular Slag-inclusion-type and Gas-pocket-type Imperfections

Size mm (in.)	Adjacent Size mm (in.)	Separation min mm (in.)	Number of Imperfections in Any 150 mm (6.0 in.) Length of Weld max	Accumulated Diameters of Imperfections in Any 150 mm (6.0 in.) Length of Weld max mm (in.)
3.2 (0.125) [a]	3.2 (0.125) [a]	50 (2.0)	2	6.4 (0.25)
3.2 (0.125) [a]	1.6 (0.063)	25 (1.0)	Varies	6.4 (0.25)
3.2 (0.125) [a]	0.8 (0.031)	13 (0.5)	Varies	6.4 (0.25)
3.2 (0.125) [a]	0.4 (0.016)	9.5 (0.4)	Varies	6.4 (0.25)
1.6 (0.063)	1.6 (0.063)	13 (0.5)	4	6.4 (0.25)
1.6 (0.063)	0.8 (0.031)	9.5 (0.4)	Varies	6.4 (0.25)
1.6 (0.063)	0.4 (0.016)	6.4 (0.25)	Varies	6.4 (0.25)
0.8 (0.031)	0.8 (0.031)	6.4 (0.25) [b]	8	6.4 (0.25)
0.8 (0.031)	0.4 (0.016)	4.8 (0.188)	Varies	6.4 (0.25)
0.4 (0.016)	0.4 (0.016)	3.2 (0.125)	16	6.4 (0.25)

[a] 2.4 mm (0.094 in.) for pipe with $t \leq 6.4$ mm (0.250 in.).

[b] Two imperfections ≤ 0.8 mm (0.031 in.) in diameter may be as close as one diameter apart, provided that they are separated from other imperfections by at least 13 mm (0.5 in.).

E.5 Ultrasonic and Electromagnetic Inspection

E.5.1 Equipment

E.5.1.1 Equipment using ultrasonic or electromagnetic principles and capable of continuous and uninterrupted inspection of the weld seam of welded pipe or the outside and/or inside surface of SMLS pipe shall be used, as appropriate.

E.5.1.2 For welded pipe, the equipment shall be capable of inspecting through the entire thickness of the weld seam as follows:

a) for EW and LW seams, the weld line plus 1.6 mm (0.063 in.) of adjacent parent metal on each side of the weld line;

b) for SAW and COW seams, the weld metal plus 1.6 mm (0.063 in.) of adjacent parent metal on each side of the weld metal.

E.5.2 Ultrasonic and Electromagnetic Inspection Reference Standards

E.5.2.1 Each reference standard shall have its outside diameter and wall thickness within the tolerances specified for the production pipe to be inspected.

NOTE In some of the referenced ISO standards for nondestructive inspection, the term “tubular test piece” or “reference tube” or “test piece” is used to denote the term “reference standard” as used in this specification.

E.5.2.2 Reference standards may be of any convenient length, as determined by the manufacturer.

E.5.2.3 Reference standards shall contain as reference indicators one or more machined notches or one or more radially drilled holes as given in Table E.7.

E.5.2.4 Reference indicators shall be separated in the reference standard by an amount sufficient to enable separate and distinguishable indications to be produced.

NOTE In some of the referenced ISO standards for nondestructive inspection, the term “reference standard” is used to denote the term “reference indicator” as used in this specification.

E.5.2.5 Reference standards shall be identified. The dimensions and type of reference indicators shall be verified by a documented procedure.

Table E.7—Reference Indicators

Item	Reference Indicators [a]							
	Notch Location		Notch Orientation		Notch Dimensions			Diameter of Radially Drilled Hole [b]
	OD	ID	Longitudinal	Transverse	Depth [c] %	Length [d] max mm (in.)	Width max mm (in.)	mm (in.)
EW seam	e,l	e,l	e,l	f	10.0	50 (2.0)	1.0 (0.040)	3.2 (0.125) [l]
LW seam	e	e	e	f	5.0 [g]	50 (2.0)	1.0 (0.040)	1.6 (0.063) [g]
SAW seam [h]	e	e	e	i	5.0 [g]	50 (2.0)	1.0 (0.040)	1.6 (0.063) [g]
COW seam [h]	e	e	e	i	5.0 [g]	50 (2.0)	1.0 (0.040)	1.6 (0.063) [g]
Coil/plate end seam [h]	e	e	e	i	5.0 [g]	50 (2.0)	1.0 (0.040)	1.6 (0.063) [g]
Jointer seam [h]	e	e	e	i	5.0 [g]	50 (2.0)	1.0 (0.040)	1.6 (0.063) [g]
PSL 2 SMLS pipe	e	e	j	f	12.5	50 (2.0)	1.0 (0.040)	3.2 (0.125)
PSL 1 SMLS pipe, quenched and tempered	k	k	j	f	12.5	50 (2.0)	1.0 (0.040)	3.2 (0.125)
PSL 1 SMLS pipe, other	k	f	j	f	12.5	50 (2.0)	1.0 (0.040)	3.2 (0.125)

NOTE 1 Notches are rectangular or U-shaped.

NOTE 2 For electromagnetic inspection, it might be necessary for the reference standard to contain OD notches, ID notches, and a radially drilled hole (see E.5.3.4).

[a] It is not necessary to locate reference indicators in the weld.

[b] Drilled hole diameters are based on standard drill-bit sizes. A hole is not required if a notch is used to establish the reject threshold.

[c] Depth is expressed as a percentage of the specified wall thickness. It is not necessary that the depth be less than 0.3 mm (0.012 in.). The depth tolerance is ± 15 % of the specified notch depth or ± 0.05 mm (0.002 in.), whichever is the greater.

[d] Length at full depth.

[e] Required if a notch is used to establish reject threshold.

[f] Not required.

[g] At the option of the manufacturer, N10 notches or 3.2 mm (0.125 in.) holes may be used (see Table E.8 for applicable acceptance limits).

[h] At the option of the manufacturer, for SAW and COW seams, the reject threshold may be established using weld-edge notches or weld-edge radially drilled holes.

[i] Either a transverse notch or a 1.6 mm (0.063 in.) radially drilled hole is required.

[j] At the option of the manufacturer, the notches may be oriented at an angle that would facilitate the detection of anticipated defects.

[k] Required for pipe with $D \geq 60.3$ mm (2.375 in.) if a notch is used to establish the reject threshold.

[l] If agreed, the reference standard shall contain OD and ID notches and a radially drilled hole.

E.5.3 Instrument Standardization

E.5.3.1 The manufacturer shall use a documented procedure to establish the reject threshold for ultrasonic or electromagnetic inspection, whichever is applicable. The applicable reference indicators given in Table E.7 shall be capable of being detected under normal operating conditions. Such capability shall be demonstrated dynamically, either on-line or off-line at the option of the manufacturer, using a speed of movement between the pipe and the transducer that simulates the inspection to be used for the production pipe.

E.5.3.2 The instrument shall be standardized with an appropriate reference standard (see E.5.2) at least twice per operating shift, with the second standardization being conducted 3–4 hours after the first to demonstrate its effectiveness and the effectiveness of the inspection procedures. Instrument standardization shall be confirmed prior to turning the unit off at the end of the inspection cycle.

NOTE In one or more of the referenced ISO standards for nondestructive inspection, the term “calibration” is used to denote the term “standardization” as used in this specification.

E.5.3.3 The instrument shall be adjusted to produce well-defined indications from the applicable reference indicators when the reference standard is inspected.

E.5.3.4 If a drilled hole is used to establish the reject threshold for electromagnetic inspection of pipe with $D \geq 60.3$ mm (2.375 in.) and the intended application is either the inspection of the weld seam of welded pipe or the concurrent inspection of the OD and ID surfaces of SMLS pipe, it shall additionally be verified that the equipment as so standardized produces indications, from both ID and OD notches in the reference standard that are equal to or greater than the reject threshold established using the drilled hole.

E.5.4 Records Verifying System Capability

E.5.4.1 The manufacturer shall maintain NDT system records verifying the system(s) capabilities in detecting the reference indicators used to establish the equipment test sensitivity.

The verification shall cover, as a minimum, the following criteria:

a) coverage calculation (i.e. scan plan);

b) capability for the intended wall thickness;

c) repeatability;

d) transducer orientation that provides detection of defects typical of the manufacturing process [see Table E.7, footnote j)];

e) documentation demonstrating that defects typical of the manufacturing process are detected using the NDT methods described in E.4 or E.5 as appropriate;

f) threshold-setting parameters.

E.5.4.2 In addition, the manufacturer shall maintain documentation relating to:

a) NDT system operating procedures,

b) NDT equipment description,

c) NDT personnel qualification information, and

d) dynamic test data demonstrating the NDT system/operation capabilities under production test conditions.

E.5.5 Acceptance Limits

E.5.5.1 The acceptance limit for indications produced by reference indicators shall be as given in Table E.8.

E.5.5.2 For ultrasonic inspection of welded pipe in the dynamic mode, any imperfection that produces an indication greater than the applicable acceptance limit given in Table E.8 shall be classified as a defect unless one of the following applies.

a) Ultrasonic inspection of the imperfection in the static mode produces an indication that is less than the applicable acceptance limit given in Table E.8 and that it is ascertained that the maximum signal has been obtained.

b) It is determined that the imperfection causing the indication is a surface imperfection that is not a defect as described in 9.10.

c) For SAW and COW pipe, it is determined by radiographic inspection that the imperfection causing the indication is a slag-inclusion type or gas-pocket type of imperfection that meets the requirements of E.4.5.

E.5.5.3 Except as allowed by E.5.5.2 b) and c), defects found by ultrasonic inspection shall not be classified as imperfections by subsequent radiographic testing.

E.5.5.4 For SMLS pipe, any surface imperfection that produces an indication greater than the applicable acceptance limit given in Table E.8 shall be classified as a defect unless it is determined that the imperfection causing the indication is not a defect as described in 9.10.

E.5.5.5 For COW seams, any continuous indication greater than 25 mm (1.0 in.) in length, regardless of the indication height, provided that it is greater than the background noise, shall be re-inspected by radiographic methods in accordance with E.4 or, if agreed, other techniques.

E.5.6 Disposition of Defects Found by Ultrasonic and Electromagnetic Inspection

Pipe containing defects shall be given one or more of the dispositions specified in E.10.

E.5.7 Weld Repair

For SAW and COW seams, defects found by ultrasonic inspection may be repaired by welding and re-inspected in accordance with C.4. Inspection of the repair shall be performed using manual UT or a combination or automatic and manual UT.

Table E.8—Acceptance Limit

Item	Notch Type	Hole Size mm (in.)	Acceptance Limit [a] max %
SAW, COW, LW, or repair weld	N5	1.6 (0.063)	100
	N10	3.2 (0.125)	33
Electric weld	N10	3.2 (0.125)	100
SMLS pipe	N12.5	3.2 (0.125)	100

[a] Expressed as a percentage of the indication produced by the reference indicator. The reject threshold (see E.5.3) shall not exceed the applicable acceptance limit.

E.6 Magnetic Particle Inspection

E.6.1 Magnetic Particle Inspection of SMLS Pipe

E.6.1.1 If magnetic particle inspection is used to inspect for longitudinal defects, the entire outside surface of the pipe shall be so inspected.

E.6.1.2 Surface imperfections revealed by magnetic particle inspection shall be investigated, classified, and treated as follows.

a) Imperfections that have a depth ≤ 0.125t and do not encroach on the minimum permissible wall thickness shall be classified as acceptable imperfections and shall be treated in accordance with C.1.

b) Imperfections that have a depth > 0.125t and do not encroach on the minimum permissible wall thickness shall be classified as defects and shall be dressed-out by grinding in accordance with C.2 or shall be treated in accordance with C.3.

c) Imperfections that encroach on the minimum permissible wall thickness shall be classified as defects and shall be treated in accordance with C.3.

NOTE "Imperfections that encroach on the minimum permissible wall thickness" implies that the portion of the wall thickness that is beneath the surface imperfection is less than the minimum permissible wall thickness.

E.6.2 Equipment

The equipment used for magnetic particle inspection shall produce a magnetic field of sufficient intensity to indicate imperfections of the following character in the external surface of the pipe: cracks, seams, and slivers.

E.6.3 Magnetic Particle Inspection Reference Standard

If requested by the purchaser, arrangements shall be made by the manufacturer to perform a demonstration for the purchaser's representative during production of the purchaser's order. Such a demonstration shall be based on pipe in process or sample lengths of similar pipe retained by the manufacturer for that purpose, that exhibit natural or artificially produced defects of the character stated in E.6.2.

E.7 Residual Magnetism

E.7.1 The requirements for residual magnetism shall apply only to testing within the pipe manufacturing facility.

NOTE Values of the residual magnetism of the pipe, subsequent to leaving the pipe manufacturing facility, can be affected by procedures and conditions imposed on the pipe during and after shipment.

E.7.2 The longitudinal magnetic field shall be measured on plain-end pipe with D ≥ 168.3 mm (6.625 in.) and smaller plain-end pipe that is inspected full length by magnetic methods or is handled by magnetic equipment prior to loading. Such measurements shall be taken on the root face or square cut face of finished plain-end pipe.

NOTE Measurements made on pipe in stacks are not considered valid.

E.7.3 Measurements shall be made using a Hall-effect gaussmeter or other type of calibrated instrument; however, in case of dispute, measurements made with a Hall-effect gaussmeter shall govern.

The gaussmeter shall be operated in accordance with written instructions demonstrated to produce accurate results.

E.7.4 Measurements shall be made on each end of a pipe, selected at least once per 4 hours per operating shift.

E.7.5 Pipe magnetism shall be measured subsequent to any inspection that uses a magnetic field, prior to loading for shipment from the manufacturer's facility. For pipe handled with electromagnetic equipment after measurement of magnetism, such handling shall be performed in a manner demonstrated not to cause residual magnetism in excess of the limits in E.7.6.

E.7.6 Four readings shall be taken approximately 90° apart around the circumference of each end of the pipe. The average of the four readings shall be ≤ 3.0 mT (30 Gs), and no one reading shall exceed 3.5 mT (35 Gs) when measured with a Hall-effect gaussmeter or equivalent values when measured with another type of instrument.

E.7.7 Any pipe that does not meet the requirements of E.7.6 shall be considered defective. Except as allowed by E.7.8, each pipe produced between the defective pipe and the last acceptable pipe shall be individually measured.

E.7.8 If the pipe production sequence is documented, pipe may be measured in reverse sequence, beginning with the pipe produced prior to the defective pipe, until at least three consecutively produced pipes meet the requirements.

NOTE It is not necessary to measure pipe produced prior to the three acceptable pipes.

E.7.9 Pipe produced after the defective pipe shall be measured individually until at least three consecutive pipes meet the requirements.

E.7.10 All defective pipe shall be de-magnetized full length, and then their magnetism shall be re-measured until at least three consecutive pipes meet the requirements of E.7.6.

E.8 Laminar Imperfections in the Pipe Body of EW, SAW, and COW Pipe

E.8.1 For EW pipe, if agreed, ultrasonic inspection shall be used to verify that the pipe body is free of laminar imperfections greater than those permitted by:

a) ISO 10893-9 acceptance level U2, if such inspection is done prior to pipe forming, or

b) ISO 10893-8 acceptance level U3, if such inspection is done after seam welding.

E.8.2 For SAW and COW pipe, if agreed, ultrasonic inspection shall be used to verify that the strip/plate or the pipe body is free of laminar imperfections greater than those permitted by ISO 10893-9 acceptance level U2.

E.9 Laminar Imperfections Along the Strip/Plate Edges or Pipe Weld Seam of EW, SAW, and COW Pipe

For EW, SAW, and COW pipe, if agreed, ultrasonic inspection shall be used to verify that the 15 mm (0.6 in.) wide zone along each of the strip/plate edges or along each side of the pipe weld seam is free of laminar imperfections greater than those permitted by:

a) ISO 10893-9 acceptance level U2, if such inspection is done prior to pipe forming, or

b) ISO 10893-8 acceptance level U2, if such inspection is done after seam welding.

E.10 Disposition of Pipe Containing Defects

Pipe containing defects shall be given one or more of the following dispositions:

a) the defects shall be removed by grinding in accordance with Annex C;

b) the defective areas shall be repaired by welding in accordance with Annex C;

c) the sections of pipe containing defects shall be cut off within the applicable limits for length; or

d) the entire pipe shall be rejected.

Annex F
(normative)

Requirements for Couplings (PSL 1 Only)

F.1 Material

F.1.1 Finished couplings shall meet the applicable requirements of PSL 1 for the grades specified in this annex with regard to chemical composition, mechanical properties, and nondestructive inspection.

F.1.2 Couplings for Grade L175, L175P, A25, and A25P pipe shall be seamless or welded.

F.1.3 Except as allowed by F.1.4, couplings for grades L210, L245, A, and B pipe shall be seamless and shall be made of a grade of material with mechanical properties equal to or greater than that of the pipe.

F.1.4 If agreed, welded couplings may be supplied on pipe with $D \geq 355.6$ mm (14.000 in.), provided that the couplings are properly marked.

F.2 Dimensions

Couplings shall conform to the dimensions and tolerances given in Table F.1 and as shown in Figure F.1.

NOTE Coupling sizes in Table F.1 are suitable for pipe having dimensions as given in Tables 24 and 25.

F.3 Inspection

Couplings shall be free from blisters, pits, cinder marks, and other imperfections that can impair the efficiency of the coupling or break the continuity of the thread.

Table F.1—Coupling Dimensions, Masses, and Tolerances

Specified Outside Diameter of Pipe D mm (in.)	Coupling Dimensions mm (in.)				Calculated Coupling Mass kg (lb)
	Specified Outside Diameter [a] W [b]	Specified Minimum Length N_L [b]	Specified Diameter of Recess Q [b]	Specified Width of Bearing Face b	
10.3 (0.405)	14.3 (0.563)	27.0 (1.063)	11.9 (0.468)	0.8 (0.031)	0.02 (0.04)
13.7 (0.540)	18.3 (0.719)	41.3 (1.625)	15.3 (0.603)	0.8 (0.031)	0.04 (0.09)
17.1 (0.675)	22.2 (0.875)	41.3 (1.625)	18.8 (0.738)	0.8 (0.031)	0.06 (0.13)
21.3 (0.840)	27.0 (1.063)	54.0 (2.125)	22.9 (0.903)	1.6 (0.063)	0.11 (0.24)
26.7 (1.050)	33.4 (1.313)	54.0 (2.125)	28.3 (1.113)	1.6 (0.063)	0.15 (0.34)
33.4 (1.315)	40.0 (1.576)	66.7 (2.625)	35.0 (1.378)	2.4 (0.093)	0.25 (0.54)
42.2 (1.660)	52.2 (2.054)	69.8 (2.750)	43.8 (1.723)	2.4 (0.093)	0.47 (1.03)
48.3 (1.900)	55.9 (2.200)	69.8 (2.750)	49.9 (1.963)	2.4 (0.093)	0.41 (0.90)
60.3 (2.375)	73.0 (2.875)	73.0 (2.875)	62.7 (2.469)	3.2 (0.125)	0.84 (1.86)
73.0 (2.875)	85.7 (3.375)	104.8 (4.125)	75.4 (2.969)	4.8 (0.188)	1.48 (3.27)
88.9 (3.500)	101.6 (4.000)	108.0 (4.250)	91.3 (3.594)	4.8 (0.188)	1.86 (4.09)
101.6 (4.000)	117.5 (4.625)	111.1 (4.375)	104.0 (4.094)	4.8 (0.188)	2.69 (5.92)
114.3 (4.500)	132.1 (5.200)	114.3 (4.500)	116.7 (4.594)	6.4 (0.250)	3.45 (7.60)
141.3 (5.563)	159.9 (6.296)	117.5 (4.625)	143.7 (5.657)	6.4 (0.250)	4.53 (9.99)
168.3 (6.625)	187.7 (7.390)	123.8 (4.875)	170.7 (6.719)	6.4 (0.250)	5.87 (12.93)
219.1 (8.625)	244.5 (9.625)	133.4 (5.250)	221.5 (8.719)	6.4 (0.250)	10.52 (23.20)
273.1 (10.750)	298.4 (11.750)	146.0 (5.750)	275.4 (10.844)	9.5 (0.375)	14.32 (31.58)
323.9 (12.750)	355.6 (14.000)	155.6 (6.125)	326.2 (12.844)	9.5 (0.375)	22.37 (49.32)
355.6 (14.000)	381.0 (15.000)	161.9 (6.375)	358.0 (14.094)	9.5 (0.375)	20.81 (45.88)
406.4 (16.000)	431.8 (17.000)	171.4 (6.750)	408.8 (16.094)	9.5 (0.375)	23.35 (55.89)
457 (18.000)	482.6 (19.000)	181.0 (7.125)	459.6 (18.094)	9.5 (0.375)	30.20 (66.61)
508 (20.000)	533.4 (21.000)	193.7 (7.625)	510.4 (20.094)	9.5 (0.375)	36.03 (79.45)

[a] Tolerances for outside diameter of couplings are $\pm 0.01W$.

[b] These symbols have been retained on the basis of their long-standing use by API in API 5L [17] and API 5CT [21].

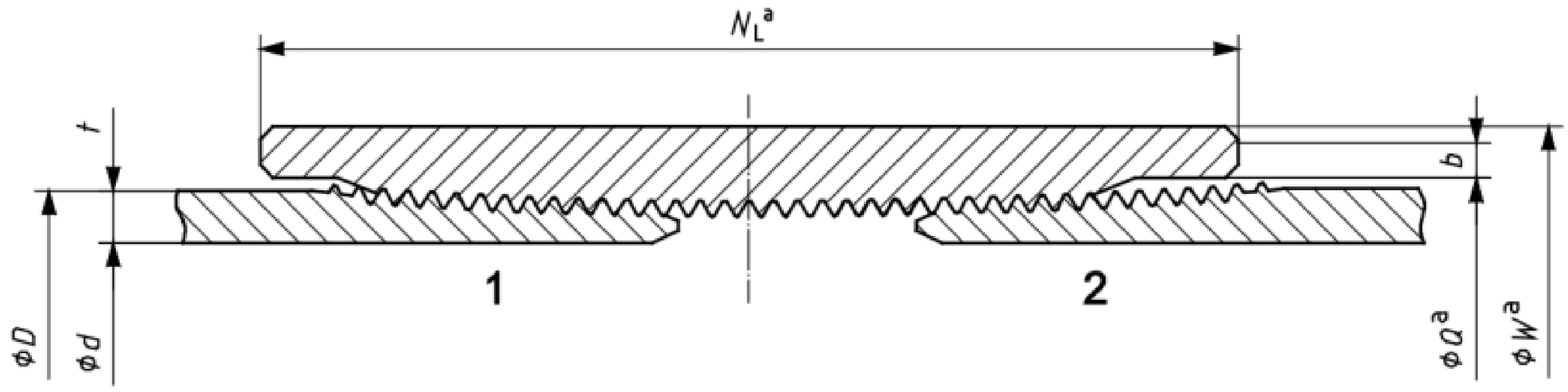

Key

1 basic power-tight make-up
2 hand-tight make-up
b specified width of bearing face
d inside diameter pipe
D specified outside diameter of pipe
N_L specified minimum length
Q specified diameter of recess
t wall thickness of pipe
W specified outside diameter of coupling

[a] These symbols have been retained on the basis of their long-standing use by API in API 5L and API 5CT [21].

Figure F.1—Line Pipe and Coupling

Annex G
(normative)

PSL 2 Pipe with Resistance to Ductile Fracture Propagation

G.1 Introduction

G.1.1 This annex specifies additional provisions that apply for PSL 2 pipe that can be CVN impact tested (see Table 22) and is ordered with resistance in the pipe body to ductile fracture propagation in gas pipelines [see 7.2 c) 55)]. This annex also provides guidance on determining CVN impact values for the arrest of ductile pipe fractures.

NOTE 1 A combination of sufficient shear-fracture area and sufficient CVN absorbed energy is an essential pipe-body property to ensure the avoidance of brittle fracture propagation and the control of ductile fracture propagation in gas pipelines (see 9.8.2.2).

NOTE 2 It is important that the user take appropriate steps to ensure that the operating parameters, including gas composition and pressure, of any gas pipeline to which the requirements of this annex apply are comparable or consistent with the test condition on which the respective guidance method was established; application of the guidance methods to pipeline conditions outside of the validity of the respective method can result in a nonconservative assessment of the resistance of the material to running fracture.

G.1.2 The guidance methods described in G.7 to G.10 for determining the pipe body CVN absorbed energy values necessary to control ductile fracture propagation in buried onshore gas pipelines originate and are supported by extensive theoretical and test work conducted mainly, or exclusively, on welded line pipe. If use is made of these methods to determine the CVN absorbed energy values required to control ductile fracture in seamless pipe, the user should exercise caution with respect to the calculated values obtained and verification by full-scale burst testing (see G.11) may be required.

G.2 Additional Information to Be Supplied by the Purchaser

G.2.1 The purchase order shall specify which of the following provisions apply for the specific order item:

a) CVN minimum average absorbed energy value (based on full-size test pieces) for each test, or

b) CVN minimum average absorbed energy value (based on full-size test pieces) for the order item.

G.2.2 The purchase order shall also specify:

a) CVN impact test temperature, and

b) DWT test temperature [for $D \geq 508$ mm (20.000 in.) only].

G.3 Acceptance Criteria

G.3.1 For each CVN impact test of the pipe body of pipe with $D < 508$ mm (20.000 in.), the average shear fracture area shall be ≥ 85 % based on the test temperature specified in the purchase order.

G.3.2 If the purchase order specifies provision G.2.1 a), the average (of a set of three test pieces) absorbed energy for each pipe body test shall not be less than specified in the purchase order based on full-size test pieces and the test temperature specified in the purchase order.

G.3.3 If the purchase order specifies provision G.2.1 b), the average (of all tests performed on the order item) absorbed energy for the order item shall not be less than specified in the purchase order based on full-size test pieces.

G.3.4 For each DWT test of the pipe body, the average shear fracture area shall be ≥ 85 % based on the test temperature specified in the purchase order.

NOTE The DWT test is customarily specified by users when ordering pipe for gas pipeline service; when the shear area in the DWT test is ≥ 85 %, the test provides assurance that the steel fractures in a predominantly ductile manner at the test temperature; in order to determine the resistance of the line pipe to running fracture under service conditions, it is important that the steel be assessed further using one of the guidance methods described in this annex within the limits of its validity.

G.4 Test Frequency

G.4.1 For welded pipe with D < 508 mm (20.000 in.), CVN testing of the pipe body shall be carried out at the frequency given in Table 18.

G.4.2 For welded pipe with D ≥ 508 mm (20.000 in.), CVN and DWT testing of the pipe body shall be carried out at the frequency given in Table 18.

G.5 Pipe Markings and Inspection Documents

G.5.1 In addition to the pipe markings required in 11.2, the PSL designation shall be followed by the letter "G" to indicate that Annex G applies.

G.5.2 In addition to the requirements of 10.1.3.2, the inspection document shall include the following:

a) the DWT and CVN (as applicable) test temperature(s),

b) the minimum average absorbed CVN energy value for each test, and

c) the minimum average absorbed CVN energy value for the order item.

G.6 Guidance for Determining CVN Absorbed Energy Values in Buried Onshore Gas Pipelines

G.6.1 Sections G.7 to G.11 describe five approaches that may be adopted for determining the pipe body CVN absorbed energy values to control ductile fracture propagation in buried onshore gas pipelines. For each of the approaches, details concerning the range of applicability are given.

NOTE It is not intended that this annex exclude other approaches to be adopted by the designer of the pipeline.

G.6.2 The CVN absorbed energy value derived by the approaches described in G.7 to G.11, or a higher value, can be specified either as a minimum value for each test or as a minimum average value for the order item.

NOTE 1 The predicted length of fracture propagation is longer if the derived CVN value is specified as a minimum average absorbed energy value for the order item rather than as a minimum average absorbed energy value for each test (see reference [12] for additional information).

NOTE 2 The requirements herein were developed for buried onshore pipelines transporting lean gas; these requirements might be conservative for buried offshore pipelines.

G.7 EPRG Guidelines—Approach 1

G.7.1 This approach is based on the European Pipeline Research Group (EPRG) guidelines for fracture arrest in gas transmission pipelines [10]. The applicability of this approach is limited to welded pipe. The values given in Tables G.1, G.2, and G.3 are the minimum average (of a set of three test pieces) absorbed energy values and are applicable for gas pipelines with operating pressures up to 8.0 MPa (1160 psi), $D \leq 1430$ mm (56.000 in.), and $t \leq 25.4$ mm (1.000 in.), conveying fluids that exhibit single-phase behavior during sudden decompression. The minimum full-size CVN absorbed energy values, K_V, expressed in joules (foot·pounds force), in those tables are the greater of 40 J (for pipe grades < L555 or X80) or 80 J (for Grade L555 or X80) and the values derived using whichever of Equations (G.1) to (G.3) is applicable for the pipe grade:

a) Grade ≤ L450 or X65:

$$K_V = C_1 \times \sigma_h^{1.5} \times D^{0.5} \tag{G.1}$$

b) Grades > L450 or X65, but ≤ L485 or X70:

$$K_V = C_2 \times \sigma_h^{1.5} \times D^{0.5} \tag{G.2}$$

c) Grades > L485 or X70, but ≤ Grade L555 or X80:

$$K_V = C_3 \times \sigma_h^2 \times \left(\frac{Dt}{2}\right)^{1/3} \tag{G.3}$$

where

σ_h is the design hoop stress, expressed in megapascals (kilopounds per square inch);

D is the specified outside diameter, expressed in millimeters (inches);

t is the specified wall thickness, expressed in millimeters (inches);

C_1 is 2.67×10^{-4} for calculations using SI units and 1.79×10^{-2} for calculations using USC units;

C_2 is 3.21×10^{-4} for calculations using SI units and 2.16×10^{-2} for calculations using USC units;

C_3 is 3.57×10^{-5} for calculations using SI units and 1.08×10^{-2} for calculations using USC units.

NOTE The values derived using Equation (G.1) are 0.75 times the values derived using Equation (G.5) in Approach 4; the values derived using Equation (G.2) are 0.9 times the values derived using Equation (G.5) in Approach 4; the values derived using Equation (G.3) are identical to the values derived using Equation (G.4) in Approach 2.

G.7.2 For the application of this approach, safety margins and length of fracture propagation can be taken from the EPRG report [11].

Table G.1—Minimum CVN Absorbed Energy Requirements for a Design Factor of 0.625

Specified Outside Diameter D mm (in.)	Full-size CVN Absorbed Energy, min K_V J (ft·lbf)						
	Pipe Grade						
	≤ L245 or B	> L245 or B to L290 or X42	> L290 or X42 to L360 or X52	> L360 or X52 to L415 or X60	> L415 or X60 to L450 or X65	> L450 or X65 to L485 or X70	> L485 or X70 to L555 or X80
≤ 508 (20.000)	40 (30)	40 (30)	40 (30)	40 (30)	40 (30)	40 (30)	80 (59)
> 508 (20.000) to 610 (24.000)	40 (30)	40 (30)	40 (30)	40 (30)	40 (30)	41 (30)	80 (59)
> 610 (24.000) to 711 (28.000)	40 (30)	40 (30)	40 (30)	40 (30)	40 (30)	45 (33)	80 (59)
> 711 (28.000) to 813 (32.000)	40 (30)	40 (30)	40 (30)	40 (30)	40 (30)	48 (35)	80 (59)
> 813 (32.000) to 914 (36.000)	40 (30)	40 (30)	40 (30)	40 (30)	40 (30)	51 (38)	80 (59)
> 914 (36.000) to 1016 (40.000)	40 (30)	40 (30)	40 (30)	40 (30)	40 (30)	53 (39)	80 (59)
> 1016 (40.000) to 1118 (44.000)	40 (30)	40 (30)	40 (30)	40 (30)	42 (31)	56 (41)	82 (60)
> 1118 (44.000) to 1219 (48.000)	40 (30)	40 (30)	40 (30)	40 (30)	43 (32)	58 (43)	87 (64)
> 1219 (48.000) to 1422 (56.000)	40 (30)	42 (31)	42 (31)	42 (31)	47 (35)	63 (46)	96 (71)

Table G.2—Minimum CVN Absorbed Energy Requirements for a Design Factor of 0.72

Specified Outside Diameter D mm (in.)	Full-size CVN Absorbed Energy, min K_V J (ft·lbf)						
	Pipe Grade						
	≤ L245 or B	> L245 or B to L290 or X42	> L290 or X42 to L360 or X52	> L360 or X52 to L415 or X60	> L415 or X60 to L450 or X65	> L450 or X65 to L485 or X70	> L485 or X70 to L555 or X80
≤ 508 (20.000)	40 (30)	40 (30)	40 (30)	40 (30)	40 (30)	46 (34)	80 (59)
> 508 (20.000) to 610 (24.000)	40 (30)	40 (30)	40 (30)	40 (30)	40 (30)	50 (37)	80 (59)
> 610 (24.000) to 711 (28.000)	40 (30)	40 (30)	40 (30)	40 (30)	41 (30)	55 (41)	80 (59)
> 711 (28.000) to 813 (32.000)	40 (30)	40 (30)	40 (30)	40 (30)	43 (32)	58 (43)	83 (61)
> 813 (32.000) to 914 (36.000)	40 (30)	40 (30)	40 (30)	41 (30)	46 (34)	62 (46)	90 (66)
> 914 (36.000) to 1016 (40.000)	40 (30)	40 (30)	40 (30)	44 (32)	48 (35)	65 (48)	96 (71)
> 1016 (40.000) to 1118 (44.000)	40 (30)	40 (30)	40 (30)	46 (34)	51 (38)	68 (50)	102 (75)
> 1118 (44.000) to 1219 (48.000)	40 (30)	40 (30)	40 (30)	48 (35)	53 (39)	71 (52)	108 (80)
> 1219 (48.000) to 1422 (56.000)	40 (30)	42 (31)	42 (31)	51 (38)	57 (42)	77 (57)	120 (89)

Table G.3—Minimum CVN Absorbed Energy Requirements for a Design Factor of 0.80

Specified Outside Diameter D mm (in.)	Full-size CVN Absorbed Energy, min K_V J (ft·lbf)						
	Pipe Grade						
	≤ L245 or B	> L245 or B to L290 or X42	> L290 or X42 to L360 or X52	> L360 or X52 to L415 or X60	> L415 or X60 to L450 or X65	> L450 or X65 to L485 or X70	> L485 or X70 to L555 or X80
≤ 508 (20.000)	40 (30)	40 (30)	40 (30)	40 (30)	41 (30)	55 (41)	80 (59)
> 508 (20.000) to 610 (24.000)	40 (30)	40 (30)	40 (30)	40 (30)	45 (33)	60 (44)	84 (62)
> 610 (24.000) to 711 (28.000)	40 (30)	40 (30)	40 (30)	43 (32)	49 (36)	65 (48)	93 (69)
> 711 (28.000) to 813 (32.000)	40 (30)	40 (30)	40 (30)	46 (34)	52 (38)	68 (50)	102 (75)
> 813 (32.000) to 914 (36.000)	40 (30)	40 (30)	40 (30)	49 (36)	55 (41)	73 (54)	110 (81)
> 914 (36.000) to 1016 (40.000)	40 (30)	40 (30)	42 (31)	52 (38)	58 (43)	77 (57)	118 (87)
> 1016 (40.000) to 1118 (44.000)	40 (30)	40 (30)	44 (32)	54 (40)	61 (45)	81 (60)	125 (92)
> 1118 (44.000) to 1219 (48.000)	40 (30)	40 (30)	46 (34)	56 (41)	64 (47)	84 (62)	133 (98)
> 1219 (48.000) to 1422 (56.000)	40 (30)	42 (31)	49 (36)	61 (45)	69 (51)	91 (67)	148 (109)

G.8 Battelle Simplified Equation—Approach 2

This approach uses the Battelle simplified equation, which is based on the Battelle two-curve approach (see G.9). The applicability of this approach is limited to welded pipe. It is suited for natural gas mixtures that exhibit single-phase decompression behavior at operating pressures up to 7.0 MPa (1015 psi), grades ≤ L555 or X80 and $40 < D/t < 115$. The minimum full-size CVN absorbed energy values, K_V, expressed in joules (foot·pounds force), can be calculated as given in Equation (G.4):

$$K_V = C_3 \times \sigma_h^2 \times \left(\frac{Dt}{2}\right)^{1/3} \tag{G.4}$$

where

σ_h is the design hoop stress, expressed in megapascals (kilopounds per square inch);

D is the specified outside diameter, expressed in millimeters (inches);

t is the specified wall thickness, expressed in millimeters (inches);

C_3 is 3.57×10^{-5} for calculations using SI units and 1.08×10^{-2} for calculations using USC units.

If the CVN absorbed energy value derived by this approach exceeds 100 J (74 ft·lbf), based on full-size test pieces, the arrest toughness value requires correction. Specialist advice should be obtained to determine such corrections.

G.9 Battelle Two-curve Method—Approach 3

This approach is based on the Battelle two-curve method, which matches the fracture-speed curve (the driving force) with the pipe toughness or resistance curve. When these two curves are tangent, the minimum level of fracture toughness for fracture arrest is defined. The Battelle two-curve method is described in the Pipeline Research Council International Report 208, PR-3-9113 [12], which also gives the range of test data against which it was calibrated. The applicability of this method is limited to welded pipe. It is suited for fluids that exhibit single-phase decompression behavior and for rich gases that decompress into the two-phase boundary [13], for operating pressures up to 12.0 MPa (1740 psi), grades ≤ L555 or X80 and $40 < D/t < 115$. If the CVN absorbed energy value derived by this method exceeds 100 J (74 ft·lbf), based on full-size test pieces, the arrest toughness value requires correction. Specialist advice should be obtained to determine such corrections.

G.10 AISI Method—Approach 4

This approach is based on the following equation, which was statistically fitted to the full-scale burst test data by the American Iron and Steel Institute (AISI) [14] and is suited for fluids that exhibit single-phase behavior during decompression. The application of this approach is limited to the range of test data against which it was originally calibrated; approximately pipe grades ≤ L485 or X70 and $D \leq 1219$ mm (48.000 in.). Although wall thickness is not a factor in the equation, the heaviest specified wall thickness tested was 18.3 mm (0.720 in.). The applicability of this approach is limited to welded pipe. The minimum full-size CVN absorbed energy values, K_V, expressed in joules (foot·pounds force), can be calculated as given in Equation (G.5):

$$K_V = C_4 \times \sigma_h^{1.5} \times D^{0.5} \tag{G.5}$$

where

σ_h is the design hoop stress, expressed in megapascals (thousand of pounds per square inch);

D is the specified outside diameter, expressed in millimeters (inches);

C_4 is 3.57×10^{-4} for calculations using SI units and 2.40×10^{-2} for calculations using USC units.

If the CVN absorbed energy value derived by this approach exceeds 100 J (74 ft·lbf), based on full-size test pieces, the arrest toughness value requires correction. Specialist advice should be obtained to determine such corrections.

G.11 Full-scale Burst Testing—Approach 5

This approach is based on full-scale burst testing to validate the arrest toughness for a specific pipeline design and fluid. Typically, a range of pipe toughness is installed in the burst test section, with the pipe toughness increasing on each side of the test section as the distance from the fracture origin increases. The CVN absorbed energy needed for arrest is established based on the actual CVN absorbed energy of the pipe in which arrest is observed to occur. The pipeline-specific gas composition, temperature, and pressure level are used for the burst test. Thus, it is the most general approach and is applicable for pipeline designs that are outside the existing database of test results.

Annex H
(normative)

PSL 2 Pipe Ordered for Sour Service

H.1 Introduction

This annex specifies additional provisions that apply for PSL 2 pipe that is ordered for sour service [see 7.2 c) 56)].

WARNING—Annex H shall not be applied to PSL 1 pipe as PSL 1 pipe is not considered suitable for sour service.

NOTE The consequences of sudden failures of metallic components used for the oil and gas production associated with their exposure to H_2S-containing production fluids led to the development of NACE MR0175 and subsequently EFC Publication 16 [15]. NACE MR0175/ISO 15156-1 [20] and ISO 15156-2 were developed using those sources to provide requirements and recommendations for materials qualification and selection for application in environments containing wet H_2S in oil and gas production systems; carbon and low-alloy steels selected using ISO 15156-2 are resistant to cracking in defined H_2S-containing environments in oil and gas production but are not necessarily immune to cracking under all service conditions; different service conditions might necessitate the alternative testing that is dealt with in ISO 15156-2:2003, Annex B, which specifies requirements for qualifying carbon and low-alloy steels for H_2S service by laboratory testing.

It is the purchaser's responsibility to select the carbon and low-alloy steels suitable for the intended service.

H.2 Additional Information to Be Supplied by the Purchaser

In addition to items a) to g) as specified by 7.1, the purchase order shall indicate which of the following provisions apply for the specific order item:

a) steel casting method for strip or plate used for the manufacture of welded pipe (see H.3.3.2.1);

b) ultrasonic inspection of strip or plate for laminar imperfections (see H.3.3.2.4);

c) supply of helical seam pipe containing coil/plate end welds (see H.3.3.2.5);

d) chemical composition for intermediate grades (see H.4.1.1);

e) chemical composition for pipe with t > 25.0 mm (0.984 in.) (see H.4.1.2);

f) chemical composition limits [see Table H.1, footnotes c), d), e), f), i), j), and k)];

g) frequency of hardness testing of the longitudinal seam weld of HFW or SAW pipe (see Table H.3);

h) sulfide stress cracking (SSC) test for manufacturing procedure qualification (see Table H.3);

i) alternative hydrogen-induced cracking (HIC)/stepwise cracking (SWC) test methods and associated acceptance criteria (see H.7.3.1.3);

j) photomicrographs of reportable HIC cracks (see H.7.3.1.4);

k) alternative SSC test methods and associated acceptance criteria for manufacturing procedure qualification (see H.7.3.2.2);

l) deviation from hardness test (see H.7.3.3.2 and H.7.3.3.3);

m) deviation from four hardness impressions [see H.7.3.3.2 c)];

n) for pipe with $t \geq 5.0$ mm (0.197 in.), ultrasonic inspection for laminar imperfections within extended length of 100 mm (4.0 in.) at the pipe ends (see K.2.1.3);

o) supplementary end NDT lamination criteria (see K.2.1.3 and K.2.1.4);

p) magnetic particle inspection for laminar imperfections at each pipe end face/bevel (see K.2.1.4);

q) verification of lamination size/density (see K.3.2.2);

r) increased coverage for ultrasonic thickness measurements for SMLS pipe (see K.3.3);

s) application of one or more of the supplementary nondestructive inspection operations for SMLS pipe (see K.3.4);

t) ultrasonic inspection of SMLS pipe for the detection of transverse imperfections (see K.3.4.1);

u) full-body inspection of SMLS pipe by the flux leakage method for the detection of longitudinal and transverse imperfections (see K.3.4.2);

v) full-body inspection of SMLS pipe by the eddy current method (see K.3.4.3);

w) full-body magnetic particle inspection of pipe (see K.3.4.4);

x) limitation of individual lamination size to 100 mm^2 (0.16 $in.^2$) (see Table K.1);

y) acceptance level U2/U2H for nondestructive inspection of the weld seam of HFW pipe (see K.4.1);

z) alternate ISO 10893-10 HFW weld seam UT acceptance criteria [see K.4.1 b)];

aa) ultrasonic inspection of the pipe body of HFW pipe for laminar imperfections (see K.4.2);

bb) ultrasonic inspection of the strip/plate edges or areas adjacent to the weld for laminar imperfections (see K.4.3);

cc) nondestructive inspection of the pipe body of HFW pipe using the ultrasonic or flux leakage method (see K.4.4);

dd) use of fixed-depth notches for equipment standardization [see K.5.1.1 c)];

ee) radiographic inspection of pipe ends (noninspected ends) and repaired areas [see K.5.3 a)];

ff) magnetic particle inspection of the weld seam at the pipe ends of SAW pipe (see K.5.4).

H.3 Manufacturing

H.3.1 Manufacturing Procedure

All pipe shall be manufactured in accordance with a manufacturing procedure that has been qualified in accordance with Annex B, possibly supplemented with additional testing (see Table H.3).

H.3.2 Steelmaking

H.3.2.1 The steel shall be made to a clean steel practice using either the basic oxygen steelmaking process or the electric furnace process and shall be killed.

H.3.2.2 Vacuum degassing or alternative processes to reduce the gas content of the steel should be applied.

H.3.2.3 The molten steel shall be treated for inclusion shape control. A procedure (e.g. metallographic examination) may be agreed between the purchaser and the manufacturer to assess the effectiveness of inclusion shape control. For S levels ≤ 0.001 %, inclusion shape control may be waived by agreement.

H.3.3 Pipe Manufacturing

H.3.3.1 SMLS Pipe

SMLS pipe shall be manufactured from continuously cast (strand cast) or ingot steel. If the process of cold finishing was used, this shall be stated in the inspection document.

H.3.3.2 Welded Pipe

H.3.3.2.1 Unless otherwise agreed, coil and plate used for the manufacture of welded pipe shall be rolled from continuously cast (strand cast) or pressure cast slabs. The pipe shall be SAWL, SAWH, or HFW.

H.3.3.2.2 For HFW pipe, the abutting edges of the coil or plate should be sheared, milled, or machined before welding.

H.3.3.2.3 Coil and plate used for the manufacture of welded pipe shall be inspected visually after rolling. Visual inspection of coil used for the manufacture of welded pipe may be either of the uncoiled strip or of the coil edges.

H.3.3.2.4 If agreed for HFW pipe, such coil and plate shall be inspected ultrasonically for laminar imperfections or mechanical damage in accordance with K.4, either before or after cutting the coil or plate, or the completed pipe shall be subjected to full-body inspection, including ultrasonic inspection.

H.3.3.2.5 If agreed, helical seam pipe made from coil/plate and containing coil/plate end welds may be delivered, provided that such welds are located at least 300 mm from the pipe ends and have been subjected to the same nondestructive inspection required in Annex K for coil/plate edges and welds.

H.3.3.2.6 Intermittent tack welding of the SAWL or SAWH groove shall not be used, unless the purchaser has approved data furnished by the manufacturer to demonstrate that the mechanical properties specified for the pipe are obtainable at both the tack weld and intermediate positions.

H.3.3.3 Jointers

Jointers shall not be delivered, unless otherwise agreed.

NOTE It is the responsibility of the purchaser and the manufacturer to agree procedures for welding and qualification tests for specific sour-service jointers.

H.4 Acceptance Criteria

H.4.1 Chemical Composition

H.4.1.1 For pipe with $t \leq 25.0$ mm (0.984 in.), the chemical composition for standard grades shall be as given in Table H.1 and the chemical composition for intermediate grades shall be as agreed, but consistent with those given for the standard grades in Table H.1. The pipe designation shall be as given in Table H.1 and consists of an alpha or alphanumeric designation that identifies the grade, followed by a suffix that consists of a letter (N, Q, or M) that identifies the delivery condition and a second letter (S) that identifies the service condition.

H.4.1.2. For pipe with $t > 25.0$ mm (0.984 in.), the chemical composition shall be as agreed, with the requirements given in Table H.1 being amended as appropriate.

H.4.2 Tensile Properties

The tensile properties shall be as given in Table H.2.

Table H.1—Chemical Composition for Pipe with $t \leq 25.0$ mm (0.984 in.)

Steel Grade	Mass Fraction Based on Heat and Product Analyses % max									Carbon Equivalent [a] % max	
	C [b]	Si	Mn [b]	P	S	V	Nb	Ti	Other [c,d]	CE_{IIW}	CE_{Pcm}
SMLS and Welded Pipe											
L245NS or BNS	0.14	0.40	1.35	0.020	0.003 [e]	[f]	[f]	0.04	[g]	0.36	0.19 [h]
L290NS or X42NS	0.14	0.40	1.35	0.020	0.003 [e]	0.05	0.05	0.04	—	0.36	0.19 [h]
L320NS or X46NS	0.14	0.40	1.40	0.020	0.003 [e]	0.07	0.05	0.04	[g]	0.38	0.20 [h]
L360NS or X52NS	0.16	0.45	1.65	0.020	0.003 [e]	0.10	0.05	0.04	[g]	0.43	0.22 [h]
L245QS or BQS	0.14	0.40	1.35	0.020	0.003 [e]	0.04	0.04	0.04	—	0.34	0.19 [h]
L290QS or X42QS	0.14	0.40	1.35	0.020	0.003 [e]	0.04	0.04	0.04	—	0.34	0.19 [h]
L320QS or X46QS	0.15	0.45	1.40	0.020	0.003 [e]	0.05	0.05	0.04	—	0.36	0.20 [h]
L360QS or X52QS	0.16	0.45	1.65	0.020	0.003 [e]	0.07	0.05	0.04	[g]	0.39	0.20 [h]
L390QS or X56QS	0.16	0.45	1.65	0.020	0.003 [e]	0.07	0.05	0.04	[g]	0.40	0.21 [h]
L415QS or X60QS	0.16	0.45	1.65	0.020	0.003 [e]	0.08	0.05	0.04	[g,i,k]	0.41	0.22 [h]
L450QS or X65QS	0.16	0.45	1.65	0.020	0.003 [e]	0.09	0.05	0.06	[g,i,k]	0.42	0.22 [h]
L485QS or X70QS	0.16	0.45	1.65	0.020	0.003 [e]	0.09	0.05	0.06	[g,i,k]	0.42	0.22 [h]
Welded Pipe											
L245MS or BMS	0.10	0.40	1.25	0.020	0.002 [e]	0.04	0.04	0.04	—	—	0.19
L290MS or X42MS	0.10	0.40	1.25	0.020	0.002 [e]	0.04	0.04	0.04	—	—	0.19
L320MS or X46MS	0.10	0.45	1.35	0.020	0.002 [e]	0.05	0.05	0.04	—	—	0.20
L360MS or X52MS	0.10	0.45	1.45	0.020	0.002 [e]	0.05	0.06	0.04	—	—	0.20
L390MS or X56MS	0.10	0.45	1.45	0.020	0.002 [e]	0.06	0.08	0.04	[g]	—	0.21
L415MS or X60MS	0.10	0.45	1.45	0.020	0.002 [e]	0.08	0.08	0.06	[g,i]	—	0.21
L450MS or X65MS	0.10	0.45	1.60	0.020	0.002 [e]	0.10	0.08	0.06	[g,i,j]	—	0.22
L485MS or X70MS	0.10	0.45	1.60	0.020	0.002 [e]	0.10	0.08	0.06	[g,i,j]	—	0.22

[a] Based on product analysis (see 9.2.4 and 9.2.5). The CE_{IIW} limits apply if C > 0.12 % and the CE_{Pcm} limits apply if C ≤ 0.12 %.

[b] For each reduction of 0.01 % below the specified maximum for C, an increase of 0.05 % above the specified maximum for Mn is permissible, up to a maximum increase of 0.20 %.

[c] Al_{total} ≤ 0.060 %; N ≤ 0.012 %; Al/N ≥ 2:1 (not applicable to titanium-killed or titanium-treated steel); Cu ≤ 0.35 % (if agreed, Cu ≤ 0.10 %); Ni ≤ 0.30 %; Cr ≤ 0.30 %; Mo ≤ 0.15 %; B ≤ 0.0005 %.

[d] For welded pipe where calcium is intentionally added, unless otherwise agreed, Ca/S ≥ 1.5 if S > 0.0015 %; for SMLS and welded pipe, Ca ≤ 0.006 %.

[e] The maximum limit for S may be increased to ≤ 0.008 % for SMLS pipe and, if agreed, to ≤ 0.006 % for welded pipe; for such higher S levels in welded pipe, lower Ca/S ratios may be agreed.

[f] Unless otherwise agreed, Nb + V ≤ 0.06 %.

[g] Nb + V + Ti ≤ 0.15 %.

[h] For SMLS pipe, the listed CE_{Pcm} value may be increased by 0.03.

[i] If agreed, Mo ≤ 0.35 %.

[j] If agreed, Cr ≤ 0.45 %.

[k] If agreed, Cr ≤ 0.45% and Ni ≤ 0.50%.

Table H.2—Requirements for the Results of Tensile Tests

Pipe Steel Grade	Pipe Body of SMLS and Welded Pipe						Weld Seam of HFW and SAW Pipe
	Yield Strength [a] $R_{t0.5}$ MPa (psi)		Tensile Strength [a] R_m MPa (psi)		Ratio [b] $R_{t0.5}/R_m$	Elongation (on 50 mm or 2 in.) A_f %	Tensile Strength [c] R_m MPa (psi)
	min	max	min	max	max	min	min
L245NS or BNS L245QS or BQS L245MS or BMS	245 (35,500)	450 (65,300) [d]	415 (60,200)	655 (95,000)	0.93	[e]	415 (60,200)
L290NS or X42NS L290QS or X42QS L290MS or X42MS	290 (42,100)	495 (71,800)	415 (60,200)	655 (95,000)	0.93	[e]	415 (60,200)
L320NS or X46NS L320QS or X46QS L320MS or X46MS	320 (46,400)	525 (76,100)	435 (63,100)	655 (95,000)	0.93	[e]	435 (63,100)
L360NS or X52NS L360QS or X52QS L360MS or X52MS	360 (52,200)	530 (76,900)	460 (66,700)	760 (110,200)	0.93	[e]	460 (66,700)
L390QS or X56QS L390MS or X56MS	390 (56,600)	545 (79,000)	490 (71,100)	760 (110,200)	0.93	[e]	490 (71,100)
L415QS or X60QS L415MS or X60MS	415 (60,200)	565 (81,900)	520 (75,400)	760 (110,200)	0.93	[e]	520 (75,400)
L450QS or X65QS L450MS or X65MS	450 (65,300)	600 (87,000)	535 (77,600)	760 (110,200)	0.93	[e]	535 (77,600)
L485QS or X70QS L485MS or X70MS	485 (70,300)	635 (92,100)	570 (82,700)	760 (110,200)	0.93	[e]	570 (82,700)

[a] For intermediate grades, the difference between the specified maximum yield strength and the specified minimum yield strength shall be as given in the table for the next higher grade, and the difference between the specified minimum tensile strength and the specified minimum yield strength shall be as given in the table for the next higher grade; for intermediate grades, the tensile strength shall be ≤ 760 MPa (110,200 psi).

[b] This limit applies for pipe with D > 323.9 mm (12.750 in.).

[c] For intermediate grades, the specified minimum tensile strength for the weld seam shall be the same value as was determined for the pipe body using footnote a).

[d] For pipe requiring longitudinal testing, the maximum yield strength shall be ≤ 495 MPa (71,800 psi).

[e] The specified minimum elongation, A_f, on 50 mm or 2 in., expressed in percent and rounded to the nearest percent, shall be as determined using the following equation:

$$A_f = C\frac{A_{xc}^{0.2}}{U^{0.9}}$$

where

C is 1940 for calculations using SI units and 625,000 for calculations using USC units;

A_{xc} is the applicable tensile test piece cross-sectional area, expressed in square millimeters (square inches) as follows:

1) for circular cross-section test pieces, 130 mm² (0.20 in.²) for 12.7 mm (0.500 in.) and 8.9 mm (0.350 in.) diameter test pieces, and 65 mm² (0.10 in.²) for 6.4 mm (0.250 in.) diameter test pieces;
2) for full-section test pieces, the lesser of a) 485 mm² (0.75 in.²) and b) the cross-sectional area of the test piece, derived using the specified outside diameter and the specified wall thickness of the pipe, rounded to the nearest 10 mm² (0.01 in.²);
3) for strip test pieces, the lesser of a) 485 mm² (0.75 in.²) and b) the cross-sectional area of the test piece, derived using the specified width of the test piece and the specified wall thickness of the pipe, rounded to the nearest 10 mm² (0.01 in.²);

U is the specified minimum tensile strength, expressed in megapascals (pounds per square inch).

H.4.3 HIC/SWC Test

The test for evaluation of resistance to HIC shall meet the following acceptance criteria, with each ratio being the maximum permissible average for three sections per test specimen when tested in Solution (Environment) A (see ISO 15156-2:2003, Table B.3):

a) crack sensitivity ratio ≤ 2 %,

b) crack length ratio ≤ 15 %, and

c) crack thickness ratio ≤ 5 %.

If HIC/SWC tests are conducted in alternative media (see H.7.3.1.3) to simulate specific service conditions, alternative acceptance criteria may be agreed.

H.4.4 Hardness Test

For test pieces subjected to a hardness test (see H.7.3), the hardness in the pipe body, the weld, and HAZ shall be ≤ 250 HV10 or 22 HRC (70.6 HR 15N).

If agreed by the end user and if the specified wall thickness is greater than 9 mm, the maximum acceptable hardness measured on indents in the row that is 1.5 mm from the OD pipe surface (see Figure H.1) shall be ≤ 275 HV10 or 26 HRC (73.0 HR 15N).

NOTE 1 ISO 15156-2 provides further guidance to the end user; requirements for the alternative hardness limits for the weld cap in ISO 15156-2 include that the weld cap is not exposed directly to the sour environment.

NOTE 2 The test is performed using the Vickers hardness test or using the Rockwell HR 15N indenter, and, where the latter is used, a conversion of hardness values can be made to Rockwell C scale if required.

H.4.5 SSC Test

After removal of the SSC test specimens (see H.7.3.2) from the test medium, the specimen surface previously under tension shall be examined under a low-power microscope at X10 magnification. The occurrence of any surface breaking fissures or cracks on the tension surface of the test specimen shall constitute failure of the specimen unless it can be demonstrated that these are not the result of SSC.

H.5 Surface Conditions, Imperfections, and Defects

H.5.1 Surface imperfections, other than undercuts in SAW pipe, disclosed by visual inspection shall be investigated, classified, and treated as follows.

a) Imperfections that have a depth ≤ 0.05t and do not encroach on the minimum permissible wall thickness shall be classified as acceptable imperfections and treated in accordance with C.1.

NOTE There is a possibility of special requirements for disposition of surface imperfections being specified in the purchase order if the pipe is subsequently to be coated.

b) Imperfections that have a depth > 0.05t and do not encroach on the minimum permissible wall thickness shall be classified as defects and shall be treated in accordance with C.2, C.3 b), or C.3 c).

c) Imperfections that encroach on the minimum permissible wall thickness shall be classified as defects and treated in accordance with C.3 b) or C.3 c).

H.5.2 For welded pipe, any hard spot larger than 50 mm (2.0 in.) in any direction shall be classified as a defect if its hardness, based on individual indentations, exceeds:

a) 250 HV10, 22 HRC, or 240 HBW on the internal surface of the pipe or repair to internal seam weld bead, or

b) 275 HV10, 27 HRC, or 260 HBW on the external surface of the pipe or repair to external seam weld bead.

Pipe that contains such defects shall be treated in accordance with C.3 b) or C.3 c).

H.6 Weld Flash of HFW Pipe

The inside flash shall not extend above the contour of the pipe by more than 0.3 mm (0.012 in.) + 0.05*t*.

H.7 Inspection

H.7.1 Specific Inspection

The frequency of inspection shall be as given in Table 18, except as specifically modified in Table H.3.

Table H.3—Inspection Frequency

No	Type of Inspection	Type of Pipe	Frequency of Inspection
1	Hardness testing of pipe with D < 508 mm (20.000 in.)	SMLS, HFW, SAWL, or SAWH	Once per test unit of not more than 100 lengths of pipe with the same cold-expansion ratio [a]
2	Hardness testing of pipe with D ≥ 508 mm (20.000 in.)	SMLS, HFW, SAWL, or SAWH	Once per test unit of not more than 50 lengths of pipe with the same cold-expansion ratio [a]
3	Hardness testing of hard spots in welded pipe	HFW, SAWL, or SAWH	Each hard spot found on the internal or external surface of the pipe
4	If agreed, hardness testing of the longitudinal or helical seam weld of welded pipe	HFW, SAWL, or SAWH	As specified in the purchase order
5	Pipe diameter and out-of-roundness for pipe with D ≤ 168.3 mm (6.625 in.)	SMLS, HFW, SAWL, or SAWH	Once per test unit of not more than 100 lengths of pipe
6	Pipe diameter and out-of-roundness for pipe with D > 168.3 mm (6.625 in.)	SMLS, HFW, SAWL, or SAWH	Once per test unit of not more than 20 lengths of pipe
7	Nondestructive inspection	SMLS, HFW, SAWL, or SAWH	In accordance with Annex K
8	HIC test	SMLS, HFW, SAWL, or SAWH	One test for each of the first three heats applied; thereafter, not less than one test per each ten heats of steel
9	If agreed, SSC test	SMLS, HFW, SAWL, or SAWH	One test for each pipe provided for manufacturing procedure qualification

[a] The cold-expansion ratio is designated by the manufacturer and is derived using the designated before-expansion outside diameter or circumference and the after-expansion outside diameter or circumference; an increase or decrease in the cold-expansion ratio of more than 0.002 requires the creation of a new test unit.

H.7.2 Samples and Test Pieces for Mechanical and Technological Tests

H.7.2.1 General

H.7.2.1.1 For tensile tests, CVN impact tests, DWT tests, guided-bend tests, flattening tests, hardness tests, HIC tests, bead-on-pipe tests, bead-on-plate tests, and SSC tests, the samples shall be taken, and the corresponding test pieces shall be prepared, in accordance with the applicable reference standard.

H.7.2.1.2 Samples and test pieces for the various types of test shall be taken from locations as shown in Figures 5 and 6 and as given in Table H.4, taking into account the supplementary details in 10.2.3.2 to 10.2.3.7, 10.2.4, and H.7.2.2 to H.7.2.4.

H.7.2.2 Samples for HIC/SWC Tests

Samples for HIC/SWC tests shall be taken in accordance with NACE TM0284.

H.7.2.3 Samples and Test Pieces for SSC Tests

H.7.2.3.1 Three test pieces shall be taken from each pipe sample.

H.7.2.3.2 Unless agreed otherwise, test pieces for four-point bending SSC tests shall be ≥ 115 mm (4.5 in.) long × 15 mm (0.59 in.) wide × 5 mm (0.20 in.) thick. For welded pipe, the test piece shall contain the longitudinal or helical seam weld in the middle of the tested area and the test piece shall be oriented transverse to the weld seam (Figure 5 b) and c) Key 1). For seamless pipe, the sample shall be oriented longitudinal to the pipe body (Figure 5 a) Key 1). If agreed, samples may be flattened. Unless otherwise agreed, samples shall be machined from the inside surface of the pipe.

H.7.2.4 Samples for Hardness Tests

Samples for hardness tests shall be taken from the end of selected pipes, and, for welded pipe, each sample shall contain a section of the longitudinal or helical seam at its center (see Figure H.1).

Table H.4—Number, Orientation, and Location of Test Pieces per Sample for Hardness Tests

Type of Pipe	Sample Location	Number, Orientation, and Location of Test Pieces per Sample [a]	
		Specified Outside Diameter D mm (in.)	
		< 508 (20.000)	≥ 508 (20.000)
SMLS [b] [see Figure 5 a)]	Pipe body	1T	1T
SAWL [see Figure 5 b)]	Seam weld	1W	1W [c]
SAWH [see Figure 5 c)]	Seam weld	1W	1W
SAWH [see Figure 5 c)]	Coil/plate end weld	1WS	1WS
HFW [see Figure 5 b)]	Seam weld	1W	1W

[a] See Figure 5 for an explanation of the symbols used to designate orientation and location.

[b] Applies for both cold-expanded and nonexpanded SMLS pipe.

[c] For double-seam pipe, both longitudinal weld seams in the pipe selected to represent the test unit shall be tested.

H.7.3 Test Methods

H.7.3.1 HIC/SWC Test

H.7.3.1.1 HIC/SWC tests shall be carried out and reported in accordance with NACE TM0284.

H.7.3.1.2 Except as allowed by H.7.3.1.3, HIC/SWC tests shall be conducted in a medium complying with NACE TM0284, Solution A.

H.7.3.1.3 If agreed, HIC/SWC tests may be conducted:

a) in an alternative medium (see ISO 15156-2:2003, Table B.3) including NACE TM0284, Solution B;

b) with a partial pressure of H_2S appropriate to the intended application;

c) with acceptance criteria that are equal to or more stringent than those specified in H.4.3.

H.7.3.1.4 Values of crack length ratio, crack thickness ratio, and crack sensitivity ratio shall be reported. If agreed, photographs of any reportable crack shall be provided with the report.

H.7.3.2 SSC Test

H.7.3.2.1 Except as allowed by H.7.3.2.2, SSC tests shall be performed as follows:

a) the test method solution control shall be in accordance with NACE TM0177 Method C;

b) the test piece shall be as defined in either ISO 7539-2, ASTM G39, or H.7.2.3.2 of this specification;

c) the test solution shall be Solution A as defined in NACE TM0177;

d) the test duration shall be 720 hours.

Except as allowed by H.7.3.2.2, the test pieces shall be stressed to 0.72 times the specified minimum yield strength of the pipe.

NOTE The use of an applied stress equal to 0.72 times the specified minimum yield strength in the SSC test does not necessarily provide sufficient technical justification that the material has been prequalified for sour service applications. For further advice on prequalification, refer to ISO 15156-2.

H.7.3.2.2 If agreed, alternative SSC test methods, alternative environments (including a partial pressure of H_2S appropriate for the intended application), and associated acceptance criteria may be used (see ISO 15156-2:2003, Table B.1). If such tests are used, full details of the test environment and conditions shall be reported together with the test results.

H.7.3.3 Hardness Test

H.7.3.3.1 Hardness testing on parent metal shall be performed using the Vickers test in accordance with ISO 6507-1 or ASTM E92 or using Rockwell test HR 15N in accordance with ISO 6508-1 or ASTM E18. In case of dispute, the Vickers method shall apply.

Hardness testing on the HAZ and weld shall be carried out in accordance with ISO 6507-1 or ASTM E92.

For pipe body tests and parent metal tests, individual hardness readings exceeding the applicable acceptance limit may be considered acceptable if the average of a minimum of three and maximum of six additional readings taken within close proximity does not exceed the applicable acceptance limit, and if no

such individual reading exceeds the acceptance limit by more than 10 HV10 units or 2 HRC units, whichever is applicable.

NOTE The test is performed using the Vickers hardness test or using the Rockwell HR 15N indenter, and, where the latter is used, a conversion of hardness values can be made to Rockwell C scale if required.

H.7.3.3.2 Hardness test locations for SMLS pipe shall be as shown in Figure H.1 a), except that:

a) for pipe with t < 4.0 mm (0.156 in.), it is necessary to carry out only the mid-thickness traverse;

b) for pipe with 4.0 mm (0.156 in.) ≤ t < 6 mm (0.236 in.), it is necessary to carry out only the inside and outside surface traverses;

c) if agreed, three impressions at each through-thickness location shown in Figure H.1 a) are acceptable.

H.7.3.3.3 Hardness test locations for welded pipe shall include the weld cross-section. Indentations shall be made in the parent metal, in the original HAZ, and at the weld centerline, as shown in Figure H.1 b), c), and d), except that:

a) for pipe with t < 4.0 mm (0.156 in.), it is necessary to carry out only the mid-thickness traverse;

b) for pipe with 4.0 mm (0.156 in.) ≤ t < 6 mm (0.236 in.), it is necessary to carry out only the inside and outside surface traverses;

c) if agreed, the distance from the weld line to the indentations in the parent metal may be less than shown in Figure H.1 c) provided these indentations remain located in the parent metal.

H.7.4 Nondestructive Inspection

For nondestructive inspection, see H.3.3.2.3 to H.3.3.2.5 and Annex K.

H.7.5 HIC/SWC Retests

In the event that a set of HIC/SWC test specimens fail to meet the acceptance criteria, provision for retesting shall be agreed by purchaser and manufacturer. If applicable, reprocessing shall be as defined in 10.2.11.

H.8 Pipe Markings

In addition to the pipe markings required in 11.2, the pipe markings shall include an identification number that permits the correlation of the product or delivery unit with the related inspection document.

Only pipe conforming to the requirements of this specification for PSL 2 together with the supplementary requirements of Annex H may be marked as complying with this specification and carry the letter “S” within the grade name to indicate that the pipe is intended for sour service.

Pipe meeting requirements of both Annex H and Annex J shall be marked with both grade name suffix markings S and O (e.g. X52MS/X52MO or L360MS/L360MO).

Dimensions in millimeters (inches)

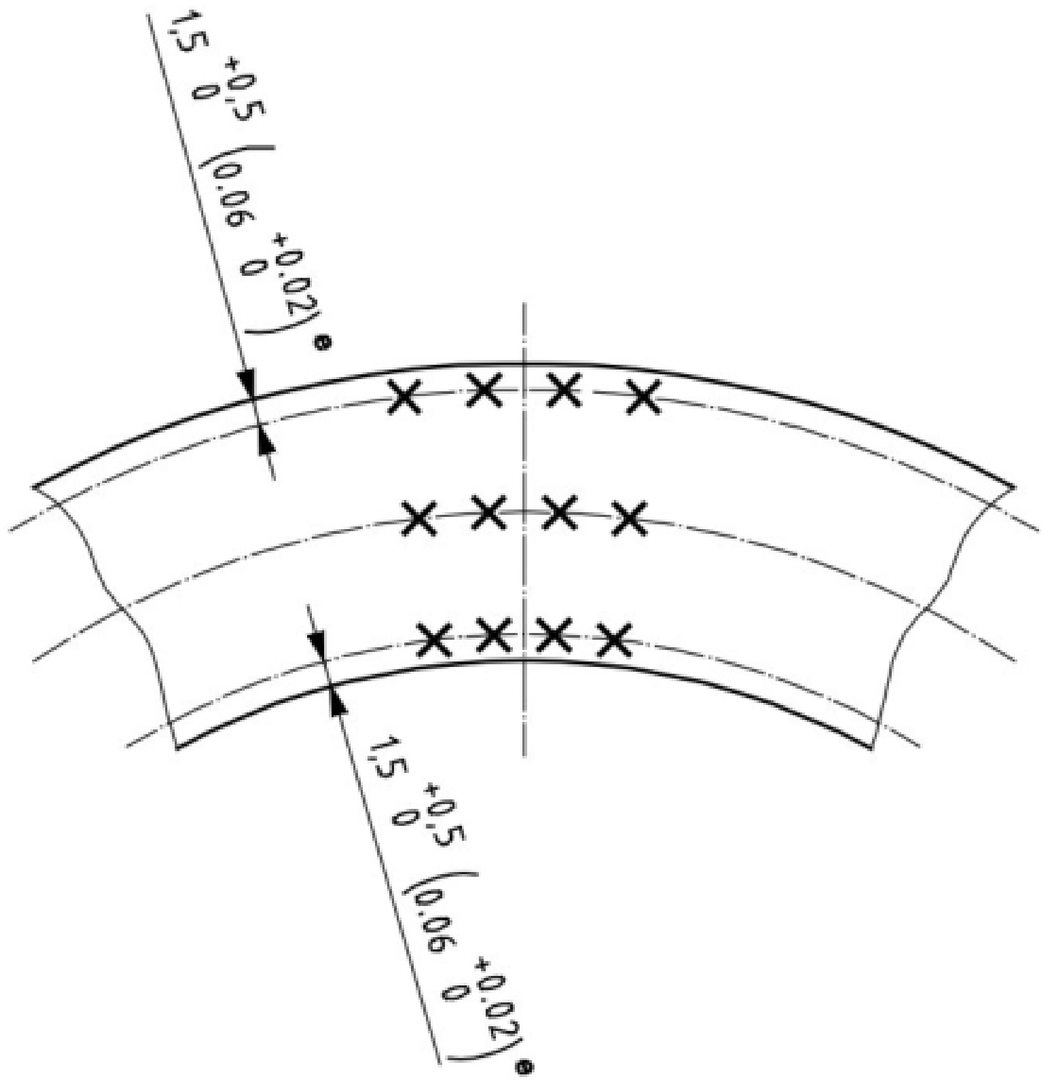

a) SMLS pipe

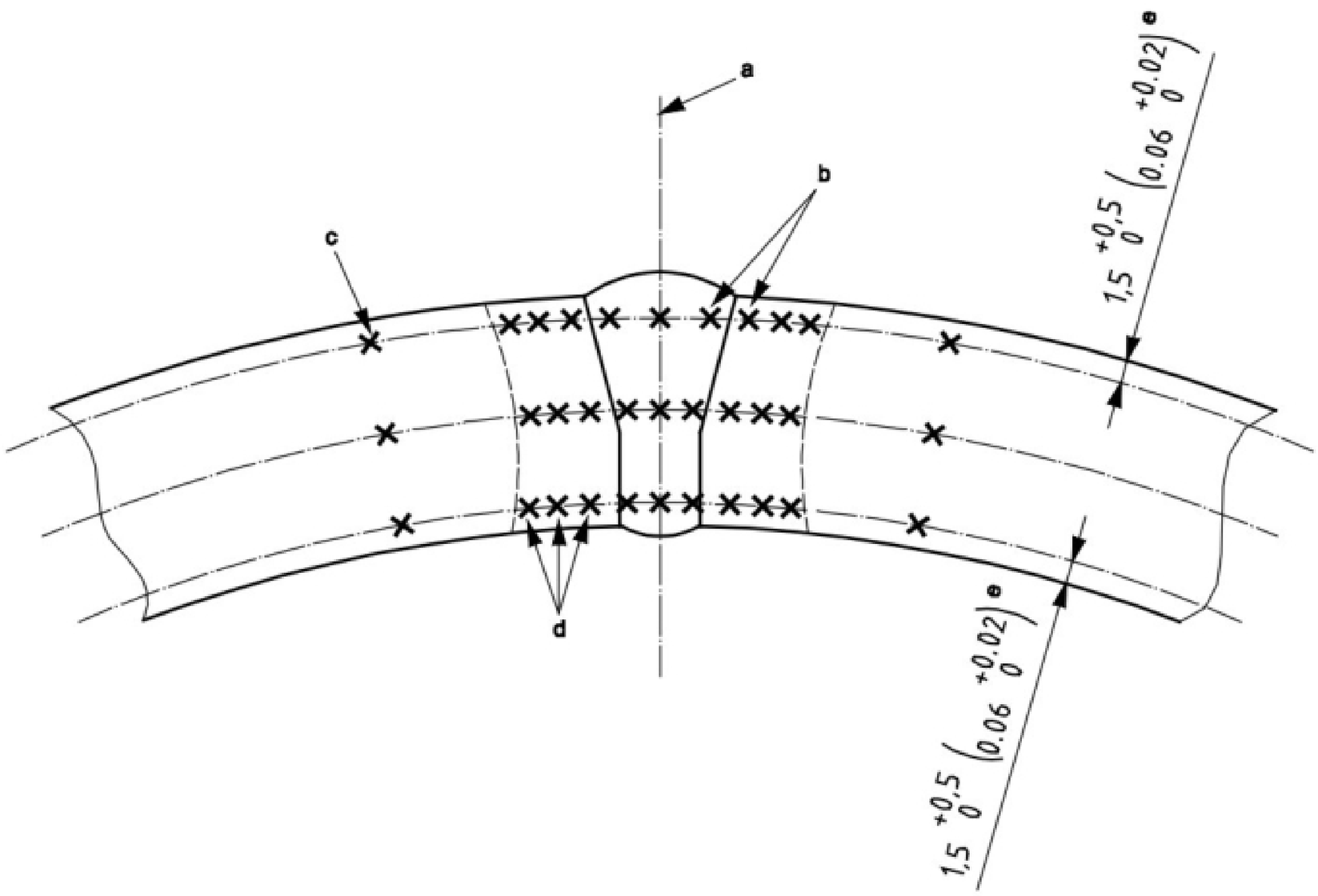

b) SAW pipe

Figure H.1—Location of Hardness Tests

Dimensions in millimeters (inches)

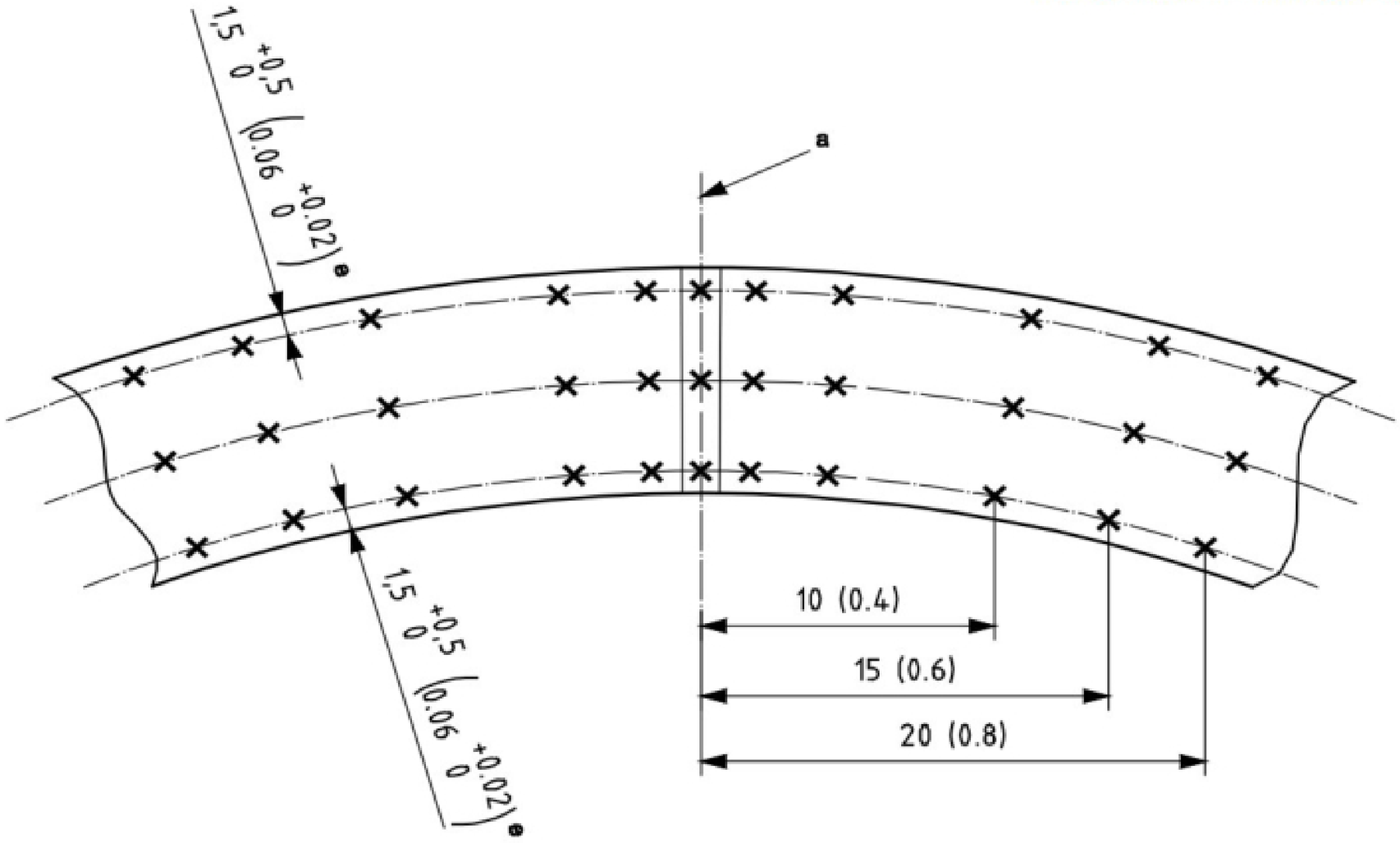

c) HFW seam-heat-treated pipe

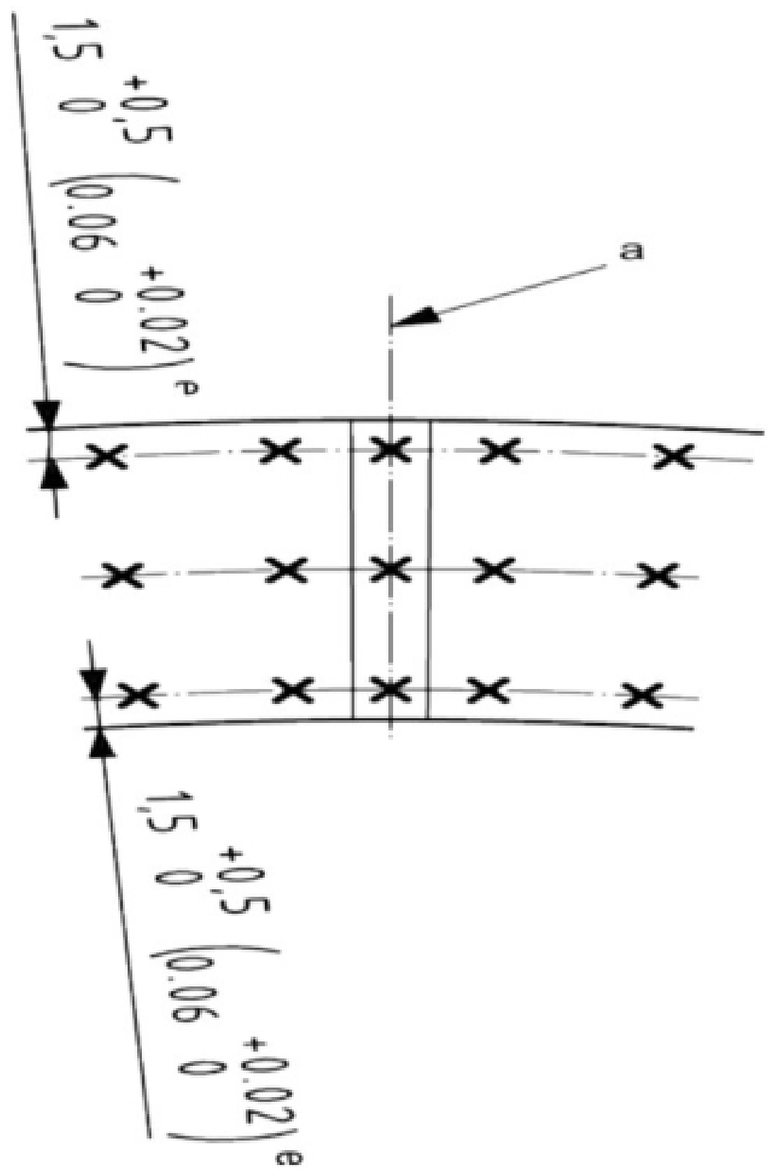

d) HFW full-body normalized or full-body quenched and tempered pipe

Figure H.1—Location of Hardness Tests *(continued)*

Key

a weld centerline; for Figure H.1 d) (full-body normalized or quenched and tempered), this position is the center of bond plane when visible; if bond plane is not visible, center on mid width of ID trim edges

b 0.75 mm (0.03 in.) from fusion line

c 1 *t* from fusion line

d 1.0 mm (0.04 in.) spacing in visible HAZ

e from inside and outside surfaces

Figure H.1—Location of Hardness Tests *(continued)*

Annex I
(normative)

Pipe Ordered as TFL Pipe

I.1 Introduction

This annex specifies additional provisions that apply for pipe that is ordered as TFL pipe [see 7.2 c) 57)].

I.2 Additional Information to Be Supplied by the Purchaser

The purchaser order shall indicate which of the following provisions apply for the specific order item:

a) type of length (see I.4), or

b) supply of jointers (see I.4).

I.3 Dimensions and Grades

TFL pipe shall be SMLS or longitudinal seam pipe in the specified outside diameters, specified wall thicknesses, and grades given in Table I.1.

I.4 Lengths and Jointers

Unless otherwise agreed, TFL pipe shall be furnished in 12 m (40 ft) random lengths with no jointers.

I.5 Drift Test

I.5.1 Each length of TFL pipe shall be tested throughout its entire length with a cylindrical drift mandrel conforming to the dimensions given in Table I.2. During the drift test, the pipe shall be properly supported to prevent sagging and shall be free of foreign matter.

I.5.2 The leading edge of the drift mandrel shall be rounded to permit easy entry into the pipe. The drift mandrel shall pass freely through the pipe with a reasonable exerted force appropriate for the mass of the drift mandrel being used for the test.

I.6 Hydrostatic Test

Each length of TFL pipe shall be hydrostatically tested in accordance with the requirements of 9.4, except that the minimum test pressures shall be as given in Table I.1.

NOTE The test pressures given in Table I.1 represent the lesser of 68.9 MPa (9990 psi) and the pressures derived using Equation (6), using a hoop stress, S, equal to 80 % of the specified minimum yield strength of the pipe.

I.7 Pipe Markings

In addition to the pipe markings required in 11.2, the PSL designation shall be followed by the letter “I” to indicate that Annex I applies.

Table I.1—Dimensions, Masses per Unit Length, and Test Pressures for TFL Pipe

Specified Outside Diameter D mm (in.)	Specified Wall Thickness t mm (in.)	Calculated Inside Diameter d mm (in.)	Grade	Mass per Unit Length ρ_l kg/m (lb/ft)	Hydrostatic Test Pressure min MPa (psi)
60.3 (2.375)	4.8 (0.188)	50.7 (1.999)	L390 or X56	6.57 (4.40)	49.2 (7140)
73.0 (2.875)	11.1 (0.438)	50.8 (1.999)	L390 or X56	16.94 (11.41)	68.9 (9990)
73.0 (2.875)	5.5 (0.216)	62.0 (2.443)	L390 or X56	9.16 (6.14)	46.5 (6740)
88.9 (3.500)	13.5 (0.530)	61.9 (2.440)	L390 or X56	25.10 (16.83)	68.9 (9990)
101.6 (4.000)	19.1 (0.750)	63.4 (2.500)	L415 or X60	38.86 (26.06)	68.9 (9990)
101.6 (4.000)	12.7 (0.500)	76.2 (3.000)	L290 or X42	27.84 (18.71)	57.9 (8400)
101.6 (4.000)	12.7 (0.500)	76.2 (3.000)	L415 or X60	27.84 (18.71)	68.9 (9990)
101.6 (4.000)	6.4 (0.250)	88.8 (3.500)	L485 or X70	15.02 (10.02)	48.6 (7050)
114.3 (4.500)	19.1 (0.750)	66.1 (3.000)	L360 or X52	44.84 (30.07)	68.9 (9990)
114.3 (4.500)	7.1 (0.281)	100.1 (3.938)	L485 or X70	18.77 (12.67)	48.0 (6960)

Table I.2—Drift Mandrel Dimensions

Specified Outside Diameter of the Pipe D mm (in.)	Mandrel Dimensions mm (in.)	
	Length	Diameter
< 88.9 (3.500)	1066 (42)	d – 2.4 (0.093)
≥ 88.9 (3.500)	1066 (42)	d – 3.2 (0.125)

NOTE d is the calculated inside diameter of the pipe (see Table I.1).

Annex J
(normative)

PSL 2 Pipe Ordered for Offshore Service

J.1 Introduction

This annex specifies additional provisions that apply for PSL 2 pipe that is ordered for offshore service [see 7.2. c) 58)].

NOTE This annex does not include requirements for specialized tests for pipe intended for applications such as pipe reeling or for pipe that will experience high (> 0.5 %) total, single event strain during installation; for such applications, additional testing can be necessary to prove the suitability of the pipe and the purchaser might need to supplement the requirements of this specification with other appropriate provisions (e.g. see Annex N and DNV-OS-F101 [16]).

J.2 Additional Information to Be Supplied by the Purchaser

The purchase order shall indicate which of the following provisions apply for the specific order item:

a) steel casting method for strip or plate used for the manufacture of welded pipe (see J.3.3.2.1);

b) ultrasonic inspection of strip or plate for laminar imperfections (see J.3.3.2.4);

c) supply of helical seam pipe containing coil/plate end welds (see J.3.3.2.5);

d) chemical composition for intermediate grades (see J.4.1.1);

e) chemical composition for pipe with t > 25.0 mm (0.984 in.) (see J.4.1.2);

f) carbon equivalent limit for steel Grade L555QO or X80QO, L625QO or X90QO, and L690QO or X100QO (see Table J.1);

g) chemical composition limits [see Table J.1, footnote d)];

h) acceptance criteria for tensile properties if determined at other than room temperature (see J.4.2.2);

i) for grades equal to or greater than Grade L555 or X80, a lower maximum tensile strength limit may be agreed [see Table J.2, footnote b)];

j) minimum average length other than 12.1 m (39.7 ft) and/or different range (see J.6.3);

k) diameter and out-of-roundness tolerances for SMLS pipe with t > 25.0 mm (0.984 in.) [see Table J.3, footnote b)];

l) use of inside diameter to determine diameter and out-of-roundness tolerances for nonexpanded pipe with $D \geq$ 219.1 mm (8.625 in.) [see Table J.3, footnote c)];

m) hardness test of the pipe body seam weld and HAZ of EW and SAW pipe (see Table J.7);

n) hardness testing of pipe body for SMLS pipe (see Table J.7);

o) crack tip opening displacement (CTOD) testing (see J.8.2.2 and Table J.6);

p) use of the ring expansion test for transverse yield strength determinations [see Table J.7, footnote c)];

q) additional longitudinal tensile testing for deep-water pipelay [see Table J.7, footnote d)];

r) deviation from hardness test [see J.8.3.2.2 c) and J.8.3.2.3];

s) deviation from location of hardness test [J.8.3.2.2.c)];

t) for pipe with $t \geq 5.0$ mm (0.197 in.), ultrasonic inspection for laminar imperfections within extended length of 100 mm (4.0 in.) at the pipe ends (see K.2.1.3);

u) supplementary end NDT lamination criteria (see K.2.1.3 and K.2.1.4);

v) magnetic particle inspection for laminar imperfections at each pipe end face/bevel (see K.2.1.4);

w) ultrasonic inspection to verify conformance with the applicable requirements given in Table K.1 (see K.3.2.2);

x) verification of lamination size/density (see K.3.2.2);

y) increased coverage for ultrasonic thickness measurements for SMLS pipe (see K.3.3);

z) application of one or more of the supplementary nondestructive inspection operations for SMLS pipe (see K.3.4);

aa) ultrasonic inspection of SMLS pipe for the detection of transverse imperfections (see K.3.4.1);

bb) full-body inspection of SMLS pipe using the flux leakage method for the detection of longitudinal and transverse imperfections (see K.3.4.2);

cc) full-body inspection of SMLS pipe by the eddy current method (see K.3.4.3);

dd) full-body magnetic particle inspection of pipe (see K.3.4.4);

ee) acceptance Level U2/U2H for nondestructive inspection of the weld seam of HFW pipe (see K.4.1);

ff) alternate ISO 10893-10 HFW weld seam UT acceptance criteria [see K.4.1 b)];

gg) ultrasonic inspection of the pipe body of HFW pipe for laminar imperfections (see K.4.2);

hh) ultrasonic inspection of the strip/plate edges or areas adjacent to the weld for laminar imperfections (see K.4.3);

ii) nondestructive inspection of the pipe body of HFW pipe using the ultrasonic or flux-leakage method (see K.4.4);

jj) use of fixed-depth notches for equipment standardization [see K.5.1.1 c)];

kk) radiographic inspection of the pipe ends (noninspected pipe ends) and repaired areas [see K.5.3 a)];

ll) magnetic particle inspection of the weld seam at the pipe ends of SAW pipe (see K.5.4);

mm) for grades L625QO or X90QO, and L690QO or X100QO, a lower $R_{t0.5}/R_m$ (see Table J.2).

J.3 Manufacturing

J.3.1 Manufacturing Procedure

All pipe shall be manufactured in accordance with a manufacturing procedure that has been qualified in accordance with Annex B, possibly supplemented with additional testing (see Table J.7).

J.3.2 Steelmaking

The steel shall be made to a clean steel practice, using either the basic oxygen steelmaking process or the electric furnace steelmaking process and shall be killed.

J.3.3 Pipe Manufacturing

J.3.3.1 SMLS Pipe

SMLS pipe shall be manufactured from continuously (strand) cast or ingot steel. If the process of cold finishing is used, this shall be stated in the inspection document or mill certificate.

J.3.3.2 Welded Pipe

J.3.3.2.1 Unless otherwise agreed, coil and plate used for the manufacture of welded pipe shall be rolled from continuously (strand) cast or pressure cast slabs. The pipe shall be SAWL, SAWH, or HFW.

J.3.3.2.2 For HFW pipe, the abutting edges of the coil or plate should be sheared, milled, or machined shortly before welding.

J.3.3.2.3 Coil and plate used for the manufacture of welded pipe shall be inspected visually after rolling. Visual inspection of coil used for the manufacture of welded pipe may be either of the uncoiled strip or of the coil edges.

J.3.3.2.4 If agreed, such coil and plate shall be inspected ultrasonically for laminar imperfections or mechanical damage in accordance with Annex K, either before or after cutting the coil or plate, or the completed pipe shall be subjected to full-body inspection, including ultrasonic inspection.

J.3.3.2.5 If agreed, for helical seam pipe made from coil or plate, pipe containing coil/plate end welds may be delivered, provided that such welds are located at least 300 mm (12 in.) from the pipe end and such welds have been subjected to the same nondestructive inspection that is required in Annex K for coil/plate edges and welds.

J.3.3.2.6 Intermittent tack welding of the SAWL groove shall not be used, unless the purchaser has approved data furnished by the manufacturer to demonstrate that the mechanical properties specified for the pipe are obtainable at both the tack weld and intermediate positions.

J.3.3.3 Jointers

Jointers shall not be delivered unless otherwise agreed.

NOTE It is the responsibility of the purchaser and manufacturer to agree on procedures for welding and qualification tests for specific offshore service jointers.

J.4 Acceptance Criteria

J.4.1 Chemical Composition

J.4.1.1 For pipe with $t \leq 25.0$ mm (0.984 in.), the chemical composition for standard grades shall be as given in Table J.1 and the chemical composition for intermediate grades shall be as agreed, but consistent with those given for the standard grades in Table J.1. The pipe designation shall be as given in Table J.1 and consists of an alpha or alphanumeric designation that identifies the steel grade, followed by a suffix that consists of a letter (N, Q, or M) that identifies the delivery condition and a second letter (O) that identifies the service condition.

J.4.1.2 For pipe with $t > 25.0$ mm (0.984 in.), the chemical composition shall be as agreed, with the requirements given in Table J.1 being amended as appropriate.

J.4.2 Tensile Properties

J.4.2.1 The tensile properties shall be as given in Table J.2.

J.4.2.2 If additional tensile properties are required to be determined at other than room temperature, the acceptance criteria shall be as agreed.

J.4.3 Hardness Test

For test pieces subjected to a hardness test (see J.8.3.2), the hardness in the pipe body, weld, and HAZ shall be as follows:

a) ≤ 270 HV10 or ≤ 25 HRC for grades ≤ L450 or X65,

b) ≤ 300 HV10 or ≤ 30 HRC for grades > L450 or X65 and ≤ L555 or X80, and

c) ≤ 325 HV10 or ≤ 33 HRC for grades > L555 or X80.

Table J.1—Chemical Composition for Pipe with $t \leq 25.0$ mm (0.984 in.)

Steel Grade	Mass Fraction Based on Heat and Product Analyses max %									Carbon Equivalent [a] max %	
	C [b]	Si	Mn [b]	P	S	V	Nb	Ti	Other [c]	CE_{IIW}	CE_{Pcm}
SMLS and Welded Pipe											
L245NO or BNO	0.14	0.40	1.35	0.020	0.010	[d]	[d]	0.04	[e,f]	0.36	0.19 [g]
L290NOor X42NO	0.14	0.40	1.35	0.020	0.010	0.05	0.05	0.04	[f]	0.36	0.19 [g]
L320NO or X46NO	0.14	0.40	1.40	0.020	0.010	0.07	0.05	0.04	[e,f]	0.38	0.20 [g]
L360NO or X52NO	0.16	0.45	1.65	0.020	0.010	0.10	0.05	0.04	[e]	0.43	0.22 [g]
L245QO or BQO	0.14	0.40	1.35	0.020	0.010	0.04	0.04	0.04	[f]	0.34	0.19 [g]
L290QO or X42QO	0.14	0.40	1.35	0.020	0.010	0.04	0.04	0.04	[f]	0.34	0.19 [g]
L320QO or X46QO	0.15	0.45	1.40	0.020	0.010	0.05	0.05	0.04	[f]	0.36	0.20 [g]
L360QO or X52QO	0.16	0.45	1.65	0.020	0.010	0.07	0.05	0.04	[e,h]	0.39	0.20 [g]
L390QO or X56QO	0.16	0.45	1.65	0.020	0.010	0.07	0.05	0.04	[e,h]	0.40	0.21 [g]
L415QO or X60QO	0.16	0.45	1.65	0.020	0.010	0.08	0.05	0.04	[e,h]	0.41	0.22 [g]
L450QO or X65QO	0.16	0.45	1.65	0.020	0.010	0.09	0.05	0.06	[e,h]	0.42	0.22 [g]
L485QO or X70QO	0.17	0.45	1.75	0.020	0.010	0.10	0.05	0.06	[e,h]	0.42	0.23 [g]
L555QO or X80QO	0.17	0.45	1.85	0.020	0.010	0.10	0.06	0.06	[e,h]	As agreed	
L625QO or X90QO	0.14	0.45	1.85	0.020	0.010	0.10	0.06	0.06	[e,i]	As agreed	
L690QO or X100QO	0.14	0.45	1.85	0.020	0.010	0.10	0.06	0.06	[e,i]	As agreed	
Welded Pipe											
L245MO or BMO	0.12	0.40	1.25	0.020	0.010	0.04	0.04	0.04	[f]	—	0.19
L290MO or X42MO	0.12	0.40	1.35	0.020	0.010	0.04	0.04	0.04	[f]	—	0.19
L320MO or X46MO	0.12	0.45	1.35	0.020	0.010	0.05	0.05	0.04	[f]	—	0.20
L360MO or X52MO	0.12	0.45	1.65	0.020	0.010	0.05	0.05	0.04	[e,h]	—	0.20
L390MO or X56MO	0.12	0.45	1.65	0.020	0.010	0.06	0.08	0.04	[e,h]	—	0.21
L415MO or X60MO	0.12	0.45	1.65	0.020	0.010	0.08	0.08	0.06	[e,h]	—	0.21
L450MO or X65MO	0.12	0.45	1.65	0.020	0.010	0.10	0.08	0.06	[e,h]	—	0.22
L485MO or X70MO	0.12	0.45	1.75	0.020	0.010	0.10	0.08	0.06	[e,h]	—	0.22
L555MO or X80MO	0.12	0.45	1.85	0.020	0.010	0.10	0.08	0.06	[e,h]	—	0.24

[a] Based on product analysis (see 9.2.4 and 9.2.5). The CE_{IIW} limits apply if C > 0.12 % and the CE_{Pcm} limits apply if C ≤ 0.12 %.

[b] For each reduction of 0.01 % below the specified maximum for C, an increase of 0.05 % above the specified maximum for Mn is permissible, up to a maximum increase of 0.20 %, but up to a maximum of 2.20 % for grades ≥ L625 or X90.

[c] Al_{total} ≤ 0.060 %; N ≤ 0.012 %; Al/N ≥ 2:1 (not applicable to titanium-killed steel or titanium-treated steel).

[d] Unless otherwise agreed, Nb + V ≤ 0.06 %.

[e] Nb + V + Ti ≤ 0.15 %.

[f] Cu ≤ 0.35 %; Ni ≤ 0.30 %; Cr ≤ 0.30 %; Mo ≤ 0.10 %; B ≤ 0.000 5 %.

[g] For SMLS pipe, the listed value of CE_{Pcm} is increased by 0.03 percentage points, up to a maximum of 0.25 %.

[h] Cu ≤ 0.50 %; Ni ≤ 0.50 %; Cr ≤ 0.50 %; Mo ≤ 0.50 %; B ≤ 0.000 5 %.

[i] Cu ≤ 0.50%; Ni ≤ 0.60%; Cr ≤ 0.55%; Mo ≤ 0.80%; B ≤ 0.000 5%.

Table J.2—Requirements for the Results of Tensile Tests

Pipe Grade	Pipe Body of SMLS and Welded Pipe						Weld Seam of HFW and SAW Pipe
	Yield Strength [a] $R_{t0.5}$ MPa (psi)		Tensile Strength [a] R_m MPa (psi)		Ratio [a,c] $R_{t0.5}/R_m$	Elongation (on 50 mm or 2 in.) A_f %	Tensile Strength [d] R_m MPa (psi)
	min	max	min	max	max	min	min
L245NO or BNO L245QO or BQO L245MO or BMO	245 (35,500)	450 (65,300) [e]	415 (60,200)	655 (95,000)	0.93	[f]	415 (60,200)
L290NO or X42NO L290QO or X42QO L290MO or X42MO	290 (42,100)	495 (71,800)	415 (60,200)	655 (95,000)	0.93	[f]	415 (60,200)
L320NO or X46NO L320QO or X46QO L320MO or X46MO	320 (46,400)	520 (75,000)	435 (63,100)	655 (95,000)	0.93	[f]	435 (63,100)
L360NO or X52NO L360QO or X52QO L360MO or X52MO	360 (52,200)	525 (76,000)	460 (66,700)	760 (110,200)	0.93	[f]	460 (66,700)
L390QO or X56QO L390MO or X56MO	390 (56,600)	540 (78,300)	490 (71,100)	760 (110,200)	0.93	[f]	490 (71,100)
L415QO or X60QO L415MO or X60MO	415 (60,200)	565 (81,900)	520 (75,400)	760 (110,200)	0.93	[f]	520 (75,400)
L450QO or X65QO L450MO or X65MO	450 (65,300)	570 (82,700)	535 (77,600)	760 (110,200)	0.93	[f]	535 (77,600)
L485QO or X70QO L485MO or X70MO	485 (70,300)	605 (87,700)	570 (82,700)	760 (110,200)	0.93	[f]	570 (82,700)
L555QO or X80QO L555MO or X80MO	555 (80,500)	675 (97,900)	625 (90,600)	825 (119,700) [b]	0.93	[f]	625 (90,600)
L625QO or X90QO	625 (90,600)	745 (108,000)	695 (100,800)	895 (129,800) [b]	0.97 [h]	[f]	—
L690QO or X100QO	690 (100,100) [g]	810 (117,500) [g]	760 (110,200)	960 (139,200) [b]	0.97 [i]	[f]	—

[a] For intermediate grades, the difference between the specified maximum yield strength and the specified minimum yield strength shall be as given in the table for the next higher grade, and the difference between the specified minimum tensile strength and the specified minimum yield strength shall be as given in the table for the next higher grade; for intermediate grades up to Grade L320 or X46, the tensile strength shall be ≤ 655 MPa (95,000 psi); for intermediate grades greater than Grade L320 or X46 and less than Grade L550 or X80, the tensile strength shall be ≤ 760 MPa (110,200 psi); for intermediate grades higher than Grade L555 or X80, the maximum permissible tensile strength shall be obtained by interpolation; for SI units, the calculated value shall be rounded to the nearest 5 MPa; for USC units, the calculated value shall be rounded to the nearest 100 psi.

[b] If agreed, for pipe in grades equal to or greater than Grade L555 or X80, more stringent maximum tensile strength limits may apply.

[c] This limit applies for pipe with D > 323.9 mm (12.750 in.).

[d] For intermediate grades, the specified minimum tensile strength for the weld seam shall be the same value as was determined for the pipe body using footnote a).

[e] For pipe requiring longitudinal testing the yield strength shall be ≤ 495 MPa (71,800 psi).

[f] The specified minimum elongation, A_f, on 50 mm (2 in.), expressed in percent and rounded to the nearest percent, shall be as determined using the following equation:

$$A_f = C\frac{A_{xc}^{0.2}}{U^{0.9}}$$

where

C is 1940 for calculations using SI units and 625,000 for calculations using USC units;

A_{xc} is the applicable tensile test piece cross-sectional area, expressed in square millimeters (square inches), as follows:

1) for circular cross-section test pieces, 130 mm^2 (0.20 in.^{2}) for 12.7 mm (0.500 in.) and 8.9 mm (0.350 in.) diameter test pieces; and 65 mm^2 (0.10 in.^{2}) for 6.4 mm (0.250 in.) diameter test pieces;
2) for full-section test pieces, the lesser of a) 485 mm^2 (0.75 in.^{2}) and b) the cross-sectional area of the test piece, derived using the specified outside diameter and the specified wall thickness of the pipe, rounded to the nearest 10 mm^2 (0.01 in.^{2});
3) for strip test pieces, the lesser of a) 485 mm^2 (0.75 in.^{2}) and b) the cross-sectional area of the test piece, derived using the specified width of the test piece and the specified wall thickness of the pipe, rounded to the nearest 10 mm^2 (0.01 in.^{2});

U is the specified minimum tensile strength, expressed in megapascals (pounds per square inch).

[g] For grades > L625QO or X90QO, $R_{p0.2}$ applies.

[h] Lower $R_{t0.5}/R_m$ ratio values may be specified by agreement for L625 or X90.

[i] For grades > L625 or X90, $R_{p0.2}/R_m$ applies; lower $R_{p0.2}/R_m$ ratio values may be specified by agreement.

J.5 Surface Conditions, Imperfections, and Defects

Surface imperfections, other than undercuts in SAW pipe and arc burns in the pipe, found by visual inspection, shall be investigated, classified, and treated as follows.

a) Imperfections that have a depth ≤ 0.05t and do not encroach on the minimum permissible wall thickness shall be classified as acceptable imperfections and treated in accordance with C.1.

NOTE There is a possibility of special requirements for disposition of surface imperfections being specified in the purchase order if the pipe is subsequently to be coated.

b) Imperfections that have a depth > 0.05t and do not encroach on the minimum permissible wall thickness shall be classified as defects and shall be treated in accordance with C.2 or C.3.

c) Imperfections that encroach on the minimum permissible wall thickness shall be classified as defects and treated in accordance with C.3.

J.6 Tolerances for Diameter, Wall Thickness, Length, and Straightness

J.6.1 Except as allowed by C.2.3, the diameter and out-of-roundness shall be within the tolerances given in Table J.3.

J.6.2 The wall thickness shall be within the tolerances given in Table J.4.

J.6.3 Unless otherwise agreed, the minimum average length of pipe shall be 12.1 m (39.7 ft). If requested by the purchaser, the pipe manufacturer shall confirm the maximum average length of pipe to be supplied per order item. Unless otherwise agreed, the actual length of each pipe (end face to end face) shall lie within the range 11.70 m (38.4 ft) to 12.70 m (41.7 ft). Subject to approval by the purchaser, pipe from which the test samples were taken may be delivered as short lengths.

NOTE The minimum average length of 12.1 m (39.7 ft) is based on the optimum lengths for handling on several "S-lay" barges in operation at the time of preparing this specification and could change in the course of time; a minimum average length of 12.1 m (39.7 ft) is not necessarily optimum for deep-water "J-lay" practice and can vary according to the "J-lay" system used; it is, therefore, the responsibility of the purchaser to agree with both the manufacturer and the pipe-lay contractor on the length range to be supplied.

J.6.4 The total deviation from a straight line over the entire pipe length shall be ≤ 0.15 % of the pipe length.

Table J.3—Tolerances for Diameter and Out-of-roundness

Specified Outside Diameter D mm (in.)	Diameter Tolerances [d] mm (in.)				Out-of-roundness Tolerances mm (in.)	
	Pipe Except the End [a]		Pipe End [a,b,c]		Pipe Except the End [a]	Pipe End [a,b,c]
	SMLS Pipe	Welded Pipe	SMLS Pipe	Welded Pipe		
< 60.3 (2.375)	± 0.5 (0.020) or ± 0.0075D, whichever is the greater	± 0.5 (0.020) or ± 0.0075D, whichever is the greater, but max of ± 3.2 (0.125)	± 0.5 (0.020) or ± 0.005D, whichever is the greater, but max of ± 1.6 (0.063)		0.9 (0.036)	0.6 (0.024)
≥ 60.3 (2.375) to 610 (24.000)					0.015D for $\frac{D}{t} \le 75$; by agreement for $\frac{D}{t} > 75$	0.01D for $\frac{D}{t} \le 75$; by agreement for $\frac{D}{t} > 75$
> 610 (24.000) to 1422 (56.000)	± 0.01D	± 0.005D, but max of ± 4.0 (0.160)	± 2.0 (0.079)	± 1.6 (0.063)	0.01D but max of 10 (0.4), for $\frac{D}{t} \le 75$; by agreement for $\frac{D}{t} > 75$	0.0075D but max of 8 (0.3), for $\frac{D}{t} \le 75$; by agreement for $\frac{D}{t} > 75$
> 1422 (56.000)	As agreed					

[a] The pipe end includes a length of 100 mm (4.0 in.) at each of the pipe extremities.

[b] For SMLS pipe, the tolerances apply for $t \le 25.0$ mm (0.984 in.), and the tolerances for heavier wall pipe shall be as agreed.

[c] For expanded pipe with $D \ge 219.1$ mm (8.625 in.) and for nonexpanded pipe, the diameter tolerance and the out-of-roundness tolerance may be determined using the calculated inside diameter (the specified outside diameter minus two times the specified wall thickness) or measured inside diameter rather than the specified outside diameter (see 10.2.8.3).

[d] For determining compliance to diameter tolerances, the pipe diameter is defined as the circumference of the pipe in any circumferential plane divided by pi (π).

Table J.4—Tolerances for Wall Thickness

Wall Thickness t mm (in.)	Tolerances [a] mm (in.)
SMLS Pipe	
< 4.0 (0.157)	+0.6 (0.024) –0.5 (0.020)
4.0 (0.157) to < 10.0 (0.394)	+0.15t –0.125t
10.0 (0.394) to < 25.0 (0.984)	+0.125t –0.125t
≥ 25.0 (0.984)	+3.7 (0.146) or +0.1t, whichever is the greater [b] –3.0 (0.120) or –0.1t, whichever is the greater [b]
HFW Pipe [c,d]	
≤ 6.0 (0.236)	± 0.4 (0.016)
> 6.0 (0.236) to 15.0 (0.591)	± 0.7 (0.028)
> 15.0 (0.591)	± 1.0 (0.039)
SAW Pipe [c,d]	
≤ 6.0 (0.236)	± 0.5 (0.020)
> 6.0 (0.236) to 10.0 (0.394)	± 0.7 (0.028)
> 10.0 (0.394) to 20.0 (0.787)	± 1.0 (0.039)
> 20.0 (0.787)	+1.5 (0.060) –1.0 (0.039)

[a] If the purchase order specifies a minus tolerance for wall thickness smaller than the applicable value given in this table, the plus tolerance for wall thickness shall be increased by an amount sufficient to maintain the applicable tolerance range.

[b] For pipe with $D \geq 355.6$ mm (14.000 in.) and $t \geq 25.0$ mm (0.984 in.) the tolerance is $^{+12.5\%}_{-12.5\%}$.

[c] The plus tolerance for wall thickness does not apply to the weld area.

[d] See 9.13.2 and J.7.2 for additional restrictions.

J.7 Tolerances for the Weld Seam

J.7.1 Radial Offset of Strip/Plate Edges

For HFW pipe, the radial offset of the strip/plate edges [see Figure 4 a)] shall not cause the remaining wall thickness at the weld to be less than the minimum permissible wall thickness.

For SAW pipe, the inside and outside radial offsets of the strip/plate edges [see Figure 4 b)] shall not exceed the applicable value given in Table J.5.

J.7.2 Weld Flash of HFW Pipe

The inside flash shall not extend above the contour of the pipe by more than 0.3 mm (0.012 in.) + 0.05t.

Table J.5—Maximum Permissible Radial Offset for SAW Pipe

Specified Wall Thickness *t* mm (in.)	Maximum Permissible Radial Offset [a] mm (in.)
≤ 13.0 (0.512)	1.3 (0.051)
> 13.0 (0.512) to 20.0 (0.787)	0.1*t*
> 20.0 (0.787)	2.0 (0.079)

[a] These limits apply also to strip/plate end welds.

J.8 Inspection

J.8.1 Specific Inspection

The frequency of inspection shall be as given in Table 18, except as specifically modified in Table J.6.

J.8.2 Samples and Test Pieces for Mechanical and Technological Tests

J.8.2.1 General

J.8.2.1.1 For tensile tests, CVN impact tests, guided-bend tests, hardness tests, bead-on-plate tests, bead-on-pipe tests, and CTOD tests, the samples shall be taken and the corresponding test pieces prepared in accordance with the applicable reference standard.

J.8.2.1.2 Samples and test pieces for the various test types shall be taken from locations as shown in Figures 5 and 6 and as given in Table J.7, taking into account the supplementary details in 10.2.3.2 to 10.2.3.7, 10.2.4, J.8.2.2, and J.8.2.3.

J.8.2.2 Test Pieces for CTOD Tests

Test pieces shall be taken from the weld metal, the HAZ, and the parent metal and shall be prepared in accordance with ISO 12135, ISO 15653, ISO 12737, ASTM E1820, or BS 7448-1.

J.8.2.3 Samples for Hardness Tests

Samples for hardness tests shall be taken from the end of selected pipes, and, for welded pipe, each sample shall contain a section of the longitudinal or helical seam at its center (see Figure J.1).

J.8.3 Test Methods

J.8.3.1 CTOD Test

CTOD tests shall be carried out in accordance with ISO 12135, ISO 15653, ISO 12737, ASTM E1820, or BS 7448-1. The test temperature shall be as stated in the purchase order.

J.8.3.2 Hardness Test

J.8.3.2.1 Hardness testing on the parent metal shall be performed using the Vickers test in accordance with ISO 6507-1 or ASTM E92 or using the Rockwell test HR15N in accordance with ISO 6508-1 or ASTM E18. In case of dispute, the Vickers method shall apply.

Hardness testing on the HAZ and weld shall be carried out using the Vickers test in accordance with ISO 6507-1 or ASTM E92.

For pipe body tests and parent metal tests, individual hardness readings exceeding the applicable acceptance limit may be considered acceptable if the average of a minimum of three and maximum of six additional readings taken within close proximity does not exceed the applicable acceptance limit, and no such individual reading exceeds the acceptance limit by more than 10 HV10 units or 2 HRC units, whichever is applicable.

Table J.6—Inspection Frequency

No	Type of Inspection	Type of Pipe	Frequency of Inspection
1	Tensile testing of the pipe body of pipe with D < 508 mm (20.000 in.)	SMLS, HFW, or SAW	Once per test unit of not more than 100 lengths of pipe with the same cold-expansion ratio [a]
2	Tensile testing of the pipe body of pipe with D ≥ 508 mm (20.000 in.)	SMLS, HFW, or SAW	Once per test unit of not more than 50 lengths of pipe with the same cold-expansion ratio [a]
3	Tensile testing of the longitudinal or helical seam weld of welded pipe with 219.1 mm (8.625 in.) ≤ D < 508 mm (20.000 in.)	HFW or SAW	Once per test unit of not more than 100 lengths of pipe with the same cold-expansion ratio [a,b]
4	Tensile testing of the longitudinal or helical seam weld of welded pipe with D ≥ 508 mm (20.000 in.)	HFW or SAW	Once per test unit of not more than 50 lengths of pipe with the same cold-expansion ratio [a,b,c]
5	Tensile testing of the coil/plate end weld of SAW pipe with D ≥ 219.1 mm (8.625 in.)	SAWH	At least once per 50 coil/plate end welds from pipe with the same cold-expansion ratio [a,b,d]
6	CVN impact testing of the pipe body of pipe with 114.3 mm (4.500 in.) ≤ D < 508 mm (20.000 in.) and specified wall thickness as given in Table 22	SMLS, HFW, or SAW	Once per test unit of not more than 100 lengths of pipe with the same cold-expansion ratio [a]
7	CVN impact testing of the pipe body of pipe with D ≥ 508 mm (20.000 in.) and specified wall thickness as given in Table 22	SMLS, HFW, or SAW	Once per test unit of not more than 50 lengths of pipe from the same heat of steel and with the same cold-expansion ratio [a]
8	CVN impact testing of the longitudinal or helical seam weld of welded pipe with 114.3 mm (4.500 in.) ≤ D < 508 mm (20.000 in.) and specified wall thickness as given in Table 22	HFW or SAW	Once per test unit of not more than 100 lengths of pipe with the same cold-expansion ratio [a,b]
9	CVN impact testing of the longitudinal or helical seam weld of welded pipe with D ≥ 508 mm (20.000 in.) and specified wall thickness as given in Table 22	HFW or SAW	Once per test unit of not more than 50 lengths of with the same cold-expansion ratio [a,b,c]
10	CVN impact testing of the coil/plate end weld of welded pipe with D ≥ 114.3 mm (4.500 in.) and specified wall thickness as given in Table 22	SAWH	At least once per 50 coil/plate end welds from pipe with the same cold-expansion ratio [a,b,d]
11	If agreed, hardness testing of pipe body and of the longitudinal or helical seam weld and HAZ of welded pipe	HFW, SAW, or SMLS	As agreed
12	Pipe diameter and out-of-roundness for pipe with D ≤ 168.3 mm (6.625 in.)	SMLS, HFW, or SAW	Once per test unit of not more than 100 lengths of pipe
13	Pipe diameter and out-of-roundness for pipe with D > 168.3 mm (6.625 in.)	SMLS, HFW, or SAW	Once per test unit of not more than 20 lengths of pipe
14	Nondestructive inspection	SMLS, HFW, or SAW	In accordance with Annex K
15	If agreed, for information purposes only, CTOD test for pipe in Grade ≥ L360 or X52	SAW	Once; for manufacturing procedure qualification only

[a] The cold-expansion ratio is designated by the manufacturer and is derived using the designated before-expansion outside diameter or circumference and the after-expansion outside diameter or circumference; an increase or decrease in the cold-expansion ratio of more than 0.002 requires the creation of a new test unit.

[b] In addition, pipe produced by each welding machine shall be tested at least once per week.

[c] For double-seam pipe, both longitudinal weld seams in the pipe selected to represent the test unit shall be tested.

[d] Applies only to finished helical seam pipe containing coil/plate end welds.

Table J.7—Number, Orientation, and Location of Test Pieces per Sample for Mechanical Tests

Type of Pipe	Sample Location	Type of Test	Number, Orientation, and Location of Test Pieces per Sample [a]		
			Specified Outside Diameter D mm (in.)		
			< 219.1 (8.625)	≥ 219.1 (8.625) to < 508 (20.000)	≥ 508 (20.000)
SMLS, not cold-expanded [see Figure 5 a)]	Pipe body	Tensile	1L [b]	1L	1L
		CVN	3T	3T	3T
		Hardness	1T	1T	1T
SMLS, cold-expanded [see Figure 5 a)]	Pipe body	Tensile	1L [b]	1T [c]	1T [c]
		CVN	3T	3T	3T
		Hardness	1T	1T	1T
HFW [see Figure 5 b)]	Pipe body	Tensile	1L90 [b]	1T180 [c,d]	1T180 [c,d]
		CVN	3T90	3T90	3T90
	Seam weld	Tensile	—	1W	1W
		CVN	3W	3W	3W
		Hardness	1W	1W	1W
	Pipe body and weld	Flattening	As shown in Figure 6		
SAWL [see Figure 5 b)]	Pipe body	Tensile	1L90 [b]	1T180 [c,d]	1T180 [c,d]
		CVN	3T90	3T90	3T90
	Seam weld	Tensile	—	1W	1W [e]
		CVN	3W and 3HAZ	3W and 3HAZ	3W [e] and 3HAZ [e]
		Guided-bend	2W	2W	2W [e]
		Hardness	1W	1W	1W [e]
SAWH [see Figure 5 c)]	Pipe body	Tensile	1L [b]	1T [c]	1T [c]
		CVN	3T	3T	3T
	Seam weld	Tensile	—	1W	1W
		CVN	3W and 3HAZ	3W and 3HAZ	3W and 3HAZ
		Guided-bend	2W	2W	2W
		Hardness	1W	1W	1W
	Strip/plate end weld	Tensile	—	1WS	1WS
		CVN	3WS and 3HAZ	3WS and 3HAZ	3WS and 3HAZ
		Guided-bend	2WS	2WS	2WS
		Hardness	1WS	1WS	1WS

[a] See Figure 5 for an explanation of the symbols used to designate orientation and location.

[b] Full-section longitudinal test pieces may be used at the option of the manufacturer.

[c] If agreed, annular test pieces may be used for the determination of transverse yield strength by the hydraulic ring expansion test in accordance with ASTM A370.

[d] For deep-water pipelay, additional longitudinal tests might be specified, with the requirements and test frequency being as agreed.

[e] For double-seam pipe, both longitudinal weld seams in the pipe selected to represent the test unit shall be tested.

Dimensions in millimeters (inches)

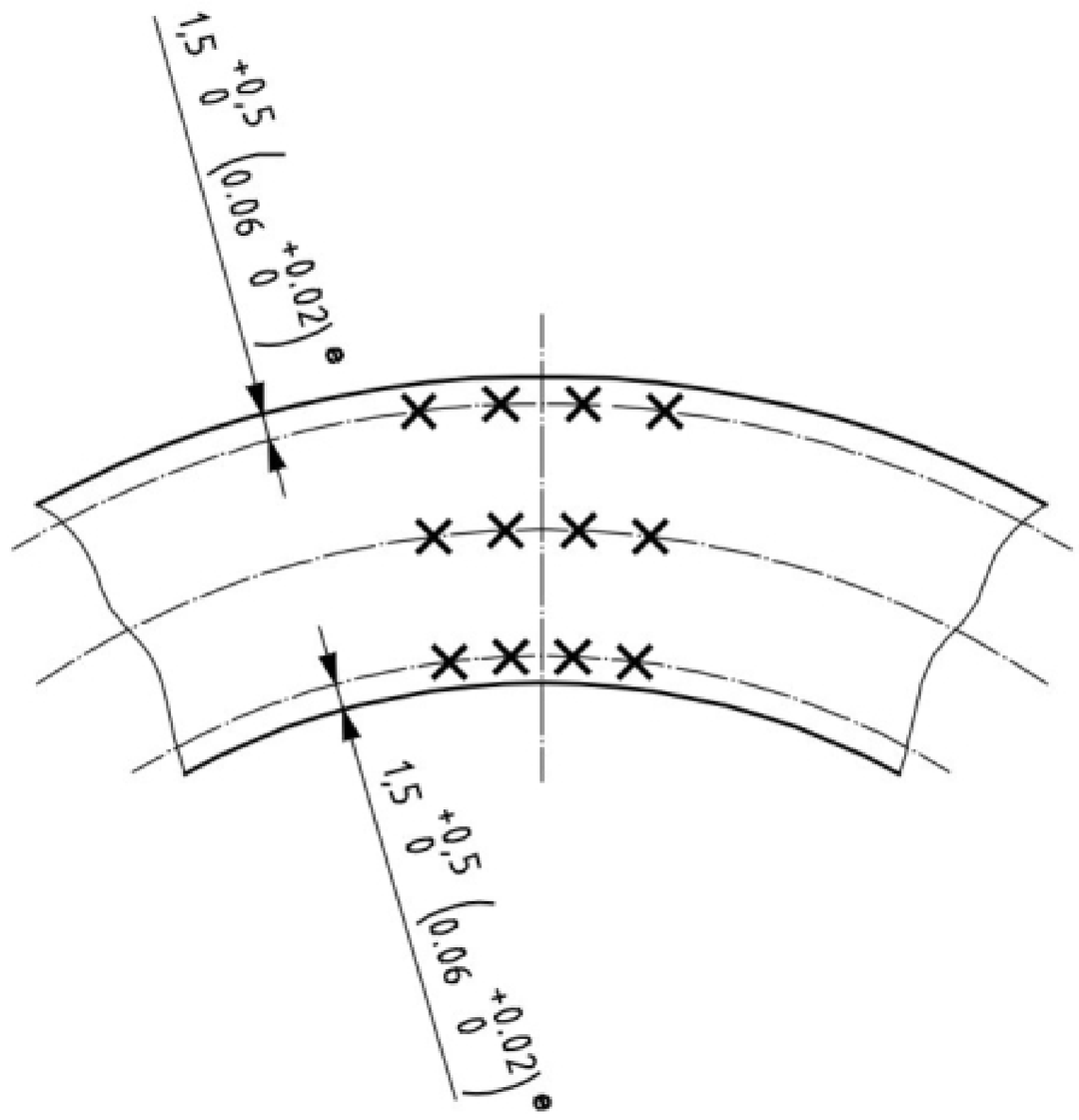

a) SMLS pipe

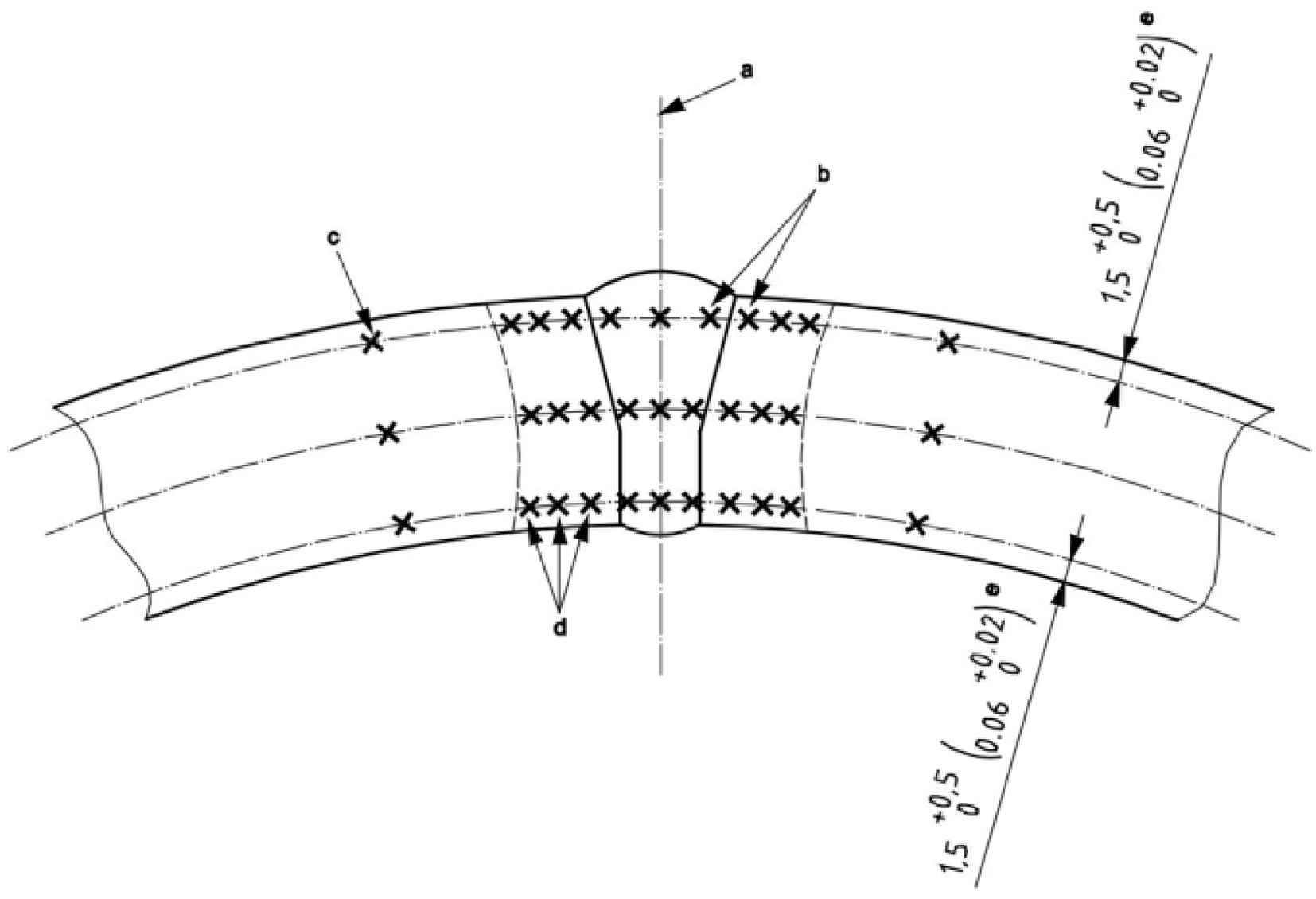

b) SAW pipe

Figure J.1—Location of Hardness Tests

Dimensions in millimeters (inches)

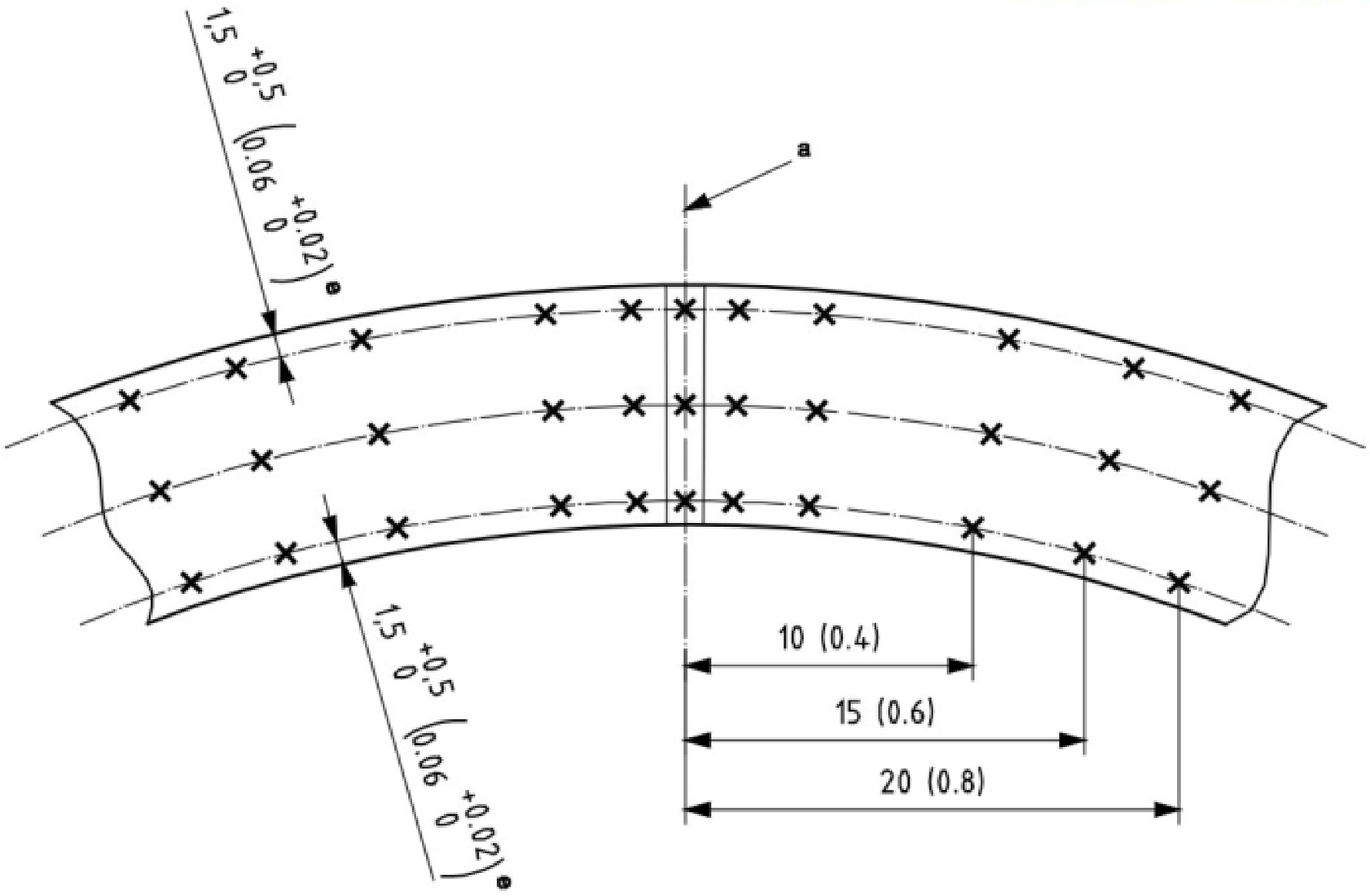

c) HFW seam-heat-treated pipe

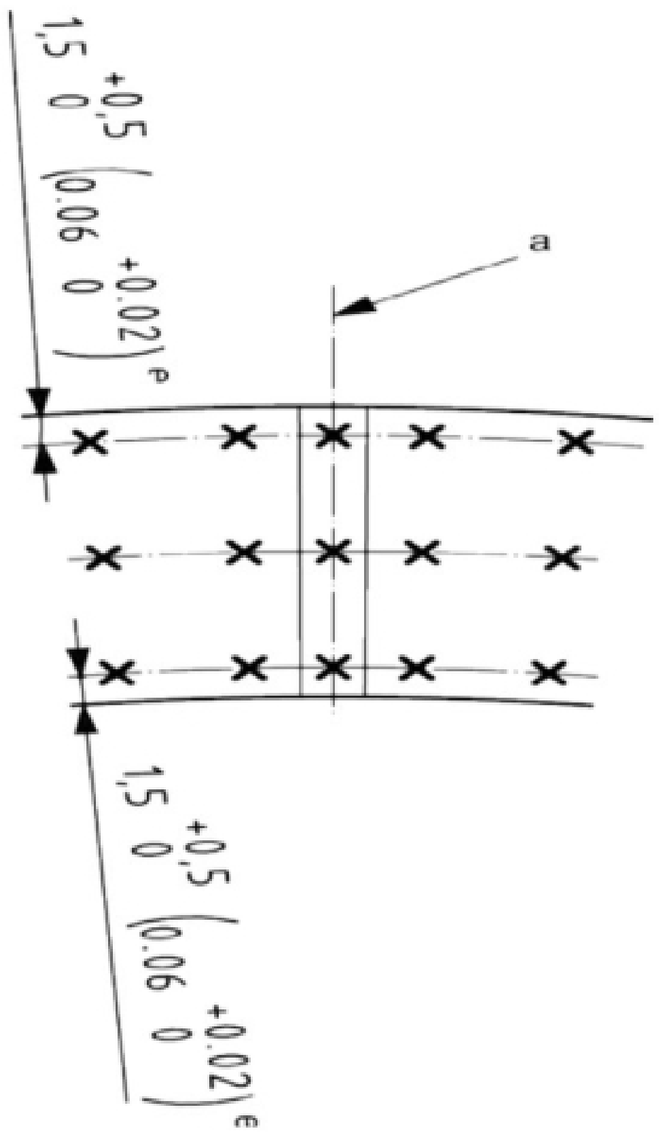

d) HFW full-body normalized or full-body quenched and tempered pipe

Figure J.1—Location of Hardness Tests *(continued)*

Key

[a] weld centerline; for Figure J.1 d) (full-body normalized or quenched and tempered), a position is center of bond plane when visible; if bond plane is not visible, center on mid width of ID trim edges

[b] 0.75 mm (0.03 in.) from fusion line

[c] 1 t from fusion line

[d] 1.0 mm (0.04 in.) spacing in visible HAZ

[e] from inside and outside surfaces

Figure J.1—Location of Hardness Tests *(continued)*

J.8.3.2.2 Hardness test locations for SMLS pipe shall be as shown in Figure J.1 a), except that:

a) for pipe with t < 4.0 mm (0.156 in.), it is necessary to carry out only the mid-thickness traverse;

b) for pipe with 4.0 mm (0.156 in.) ≤ t < 6 mm (0.236 in.), it is necessary to carry out only the inside and outside surface traverses;

c) if agreed, three impressions at each through-thickness location shown in Figure J.1 a) are acceptable.

J.8.3.2.3 Hardness locations shall include the weld cross-section. Indentations shall be made in the parent metal, in the original HAZ, and at the weld centerline, as shown in Figure J.1 b) or Figure J.1 c) or Figure J.1 d), except that:

a) for pipe with t < 4.0 mm (0.156 in.), it is necessary to carry out only the mid-thickness traverse;

b) for pipe with 4.0 mm (0.156 in.) ≤ t < 6 mm (0.236 in.), it is necessary to carry out only the inside and outside surface traverses;

c) if agreed, the distance from the weld line to the indentations in the parent metal may be less than shown in Figure J.1 c) provided these indentations remain located in the parent metal.

J.8.4 Nondestructive Inspection

For nondestructive inspection, see J.2 and Annex K.

J.9 Pipe Markings

In addition to the pipe markings required in 11.2, the pipe markings shall include an identification number that permits the correlation of the product or delivery unit with the related inspection document.

Only pipe conforming to the requirements of this specification for PSL 2 together with the supplementary requirements of Annex J may be marked as complying with this specification and carry the letter “O” within the grade name to indicate that the pipe is intended for offshore service.

Pipe meeting requirements of both Annex H and Annex J shall be marked with both grade name suffix markings S and O (e.g. X52MS/X52MO or L360MS/L360MO).

Annex K
(normative)

Nondestructive Inspection for Pipe Ordered for Sour Service, Offshore Service, and/or Service Requiring Longitudinal Plastic Strain Capacity

K.1 Introduction

This annex applies if the pipe is ordered for sour service, offshore service, or service requiring longitudinal plastic strain capacity [see 7.2 c) 56), 58), or 59)]. For such pipe, the nondestructive inspection provisions of Annex E apply, except as specifically modified by the provisions in this annex.

K.2 General Nondestructive Inspection Requirements and Acceptance Criteria

K.2.1 Laminar Imperfections at the Pipe Ends

K.2.1.1 Laminar imperfections > 6.4 mm (0.25 in.) in the circumferential direction and having an area > 100 mm^2 (0.15 $in.^2$) shall be classified as defects.

K.2.1.2 For pipe with $t \geq 5.0$ mm (0.197 in.), ultrasonic inspection with automated/semi-automated systems in accordance with ISO 10893-8 or by manual methods, as specified in Annex A of ISO 10893-8:2011, shall be used to verify that the 50 mm (2.0 in.) wide zone at each pipe end is free of such laminar defects.

K.2.1.3 If agreed for pipe with $t \geq 5.0$ mm (0.197 in.), ultrasonic inspection with automated/semi-automated systems in accordance with ISO 10893-8 or by manual methods, as specified in Annex A of ISO 10893-8:2011, shall be used to verify that the 100 mm (4.0 in.) wide zone at each pipe end is free of such laminar defects.

K.2.1.4 If agreed, the end face/bevel at each pipe end shall be magnetic particle inspected for the detection of laminar imperfections in accordance with ISO 10893-5 or ASTM E709. Laminar imperfections > 6.4 mm (0.25 in.) in the circumferential direction shall be classified as defects.

K.2.2 Suspect Pipe

K.2.2.1 Pipe giving rise to indications producing a trigger/alarm condition as a result of the specified nondestructive inspection operation shall be deemed suspect.

K.2.2.2 Suspect pipe shall be dealt with in accordance with the applicable standard for nondestructive inspection of pipe, unless otherwise stated in this annex, Annex H, Annex J, or Annex N, whichever is applicable.

K.2.2.3 Repair by welding shall be in accordance with C.4.

K.2.2.4 Where dressing is carried out, complete removal of defects shall be verified by local visual inspection, aided where necessary by suitable nondestructive inspection methods.

K.2.2.5 Any manual nondestructive inspection applied to local suspect areas (dressed or not) shall use the same inspection sensitivity, parameters, and acceptance level (reference notch depth) as used during the inspection that originally deemed the pipe to be suspect. For manual ultrasonic inspection, the scanning speed shall be ≤ 150 mm/s (6 in./s).

K.3 Nondestructive Inspection of SMLS Pipe

K.3.1 Ultrasonic Inspection for Longitudinal Imperfections

SMLS pipe shall be full-body ultrasonically inspected for the detection of longitudinal imperfections in accordance with ISO 10893-10 or ASTM E213. The acceptance limits for such inspection shall be in accordance with ISO 10893-10, acceptance level U2/C.

K.3.2 Laminar Imperfections in the Pipe Body

K.3.2.1 For sour service, individual laminations and/or lamination densities exceeding the acceptance limits for sour service given in Table K.1 shall be classified as defects. Compliance with such requirements shall be verified by ultrasonic inspection in accordance with ISO 10893-8:2011 (except 4.2), ASTM A435, or ASTM A578. The coverage during automatic inspection shall be ≥ 20 % of the pipe surface.

K.3.2.2 For offshore service and service requiring longitudinal plastic strain capacity, individual laminations and/or lamination densities exceeding the acceptance limits given in Table K.1 shall be classified as defects. If agreed, compliance with such requirements shall be verified by ultrasonic inspection in accordance with ISO 10893-8:2011 (except 4.2), ASTM A435, or ASTM A578. The coverage during automatic inspection shall be ≥ 20 % of the pipe surface.

K.3.3 Ultrasonic Thickness Measurements

SMLS pipe shall be subjected to full peripheral ultrasonic inspection in accordance with ISO 10893-12 or ASTM E114 for verification of compliance with the applicable minimum permissible wall thickness requirement. The coverage for such inspection shall be ≥ 25 % of the pipe surface or, if agreed, a greater minimum coverage.

K.3.4 Supplementary Nondestructive Inspection

K.3.4.1 If agreed, SMLS pipe shall be ultrasonically inspected for the detection of transverse imperfections in accordance with ISO 10893-10 acceptance level U2/C or ASTM E213.

K.3.4.2 If agreed, SMLS pipe shall be full-body inspected using the flux leakage method in accordance with ISO 10893-3 acceptance level F2, or ASTM E570 for the detection of longitudinal imperfections and/or ISO 10893-3 acceptance level F2, or ASTM E570 for the detection of transverse imperfections.

K.3.4.3 If agreed, SMLS pipe shall be full-body inspected for the detection of imperfections using the eddy current method in accordance with ISO 10893-2 acceptance level E2H/E2 or ASTM E309.

K.3.4.4 If agreed, subsequent to all other nondestructive inspection operations and visual inspection, full-body magnetic particle inspection shall be carried out in accordance with ISO 10893-5 or ASTM E709 on one SMLS pipe per heat of steel or batch of 50 pipes produced, whichever is fewer, in order to verify compliance with the requirements of 9.10. Such pipe shall be selected at random and, before inspection, subjected to abrasive blasting to produce an external surface preparation of Sa 2½ in accordance with ISO 8501-1 when blasted.

Table K.1—Acceptance Criteria for Laminar Imperfections

Service Condition	Maximum Individual Imperfection		Minimum Imperfection Size Considered			Maximum Population Density [a]
	Area mm^2 ($in.^2$)	Length mm (in.)	Area mm^2 ($in.^2$)	Length mm (in.)	Width mm (in.)	
Pipe Body (or Strip/Plate Body)						
Offshore and longitudinal plastic strain capacity	1000 (1.6)	Not specified	300 (0.5)	35 (1.4)	8 (0.3)	10 [per 1.0 m (3.3 ft) × 1.0 m (3.3 ft) square] [b]
Sour	500 (0.8)		150 (0.2)	15 (0.6)	8 (0.3)	10 [per 500 mm (1.6 ft) × 500 mm (1.6 ft) square] [c]
Sour, if agreed	100 (0.16)		30 (0.05)	5 (0.2)	5 (0.2)	5 [per 500 mm (1.6 ft) × 500 mm (1.6 ft) square] [c]
Strip/Plate Edges or Areas Adjacent to the Weld Seam [d]						
Sour, offshore, or longitudinal plastic strain capacity	100 (0.16)	20 (0.8)	—	10 (0.4)	—	3 [per 1.0 m (3.3 ft) length]

NOTE 1 For an imperfection to be larger than the minimum imperfection size, each of the minimum area, minimum length, and minimum width given for the pipe body (or strip/plate body) have to be exceeded.

NOTE 2 For the purpose of determining the extent of suspect area, adjacent suspect areas separated by less than the smaller of two minor axes of the areas shall be considered as one area.

[a] Number of imperfections smaller than the maximum and greater than the minimum imperfection size.

[b] For pipe with D < 323.9 mm (12.375 in.) or strip/plate widths less than 1000 mm (39.4 in.), the maximum population density is referred to 1.0 m^2 (10.8 ft^2).

[c] For pipe with D < 168.3 mm (6.625 in.) or strip/plate widths less than 500 mm (19.7 in.), the maximum population density is referred to 0.25 m^2 (2.7 ft^2).

[d] The maximum imperfection area of edges is the product of the maximum imperfection length, where length is the dimension parallel to the material edge and the transverse dimension; an imperfection is considered to be larger than the maximum imperfection size if either the length or the transverse dimension is exceeded.

K.4 Nondestructive Inspection of HFW Pipe

K.4.1 Nondestructive Inspection of the Weld Seam

The full length of the weld seam shall be ultrasonically inspected for the detection of longitudinal imperfections, with the acceptance limits being in accordance with one of the following:

a) ISO 10893-11 acceptance level U2/U2H;

b) ISO 10893-10 acceptance level U3 or, if agreed, acceptance level U2; or

c) ASTM E273.

K.4.2 Laminar Imperfections in the Pipe Body

If agreed, the pipe or strip/plate body shall be ultrasonically inspected for the detection of laminar imperfections in accordance with ISO 10893-8:2011 (except 4.2) or ISO 10893-9, respectively, to

acceptance limits for the relevant application as given in Table K.1. The coverage during automatic inspection shall be ≥ 20 % of the pipe surface.

K.4.3 Laminar Imperfections on the Strip/Plate Edges or Areas Adjacent to the Weld Seam

If agreed, the strip/plate edges or the areas adjacent to the weld seam shall be ultrasonically inspected over a width of 15 mm (0.6 in.) for the detection of laminar imperfections, in accordance with ISO 10893-9 or ISO 10893-8, respectively, to the acceptance limits as given in Table K.1 for strip/plate edges or areas adjacent to the weld seam.

K.4.4 Supplementary Nondestructive Inspection

If agreed, the pipe body of HFW pipe shall be inspected for the detection of longitudinal imperfections using the ultrasonic method in accordance with ISO 10893-10 with acceptance level U3/C or, if agreed, U2/C or ASTM E213, or the flux-leakage method in accordance with ISO 10893-3 acceptance level F3, or, if agreed, acceptance level F2, or ASTM E570.

K.5 Nondestructive Inspection of SAW Pipe

K.5.1 Ultrasonic Inspection for Longitudinal and Transverse Imperfections in Seam Welds

K.5.1.1 The full length of the weld seams of SAW pipe shall be ultrasonically inspected for the detection of longitudinal and transverse imperfections in accordance with ISO 10893-11 acceptance level U2, with the following modifications.

a) The notch depth shall be ≤ 2.0 mm (0.080 in.).

b) The use of internal and external longitudinal notches located on the center of the weld seam for equipment standardization purposes is not permitted.

c) As an alternative to the use of the reference hole for equipment calibration for the detection of transverse imperfections, it is permissible to use acceptance level U2 internal and external notches, lying at right angles to, and centered over, the weld seam. In this case, both internal and external weld reinforcements shall be ground flush to match the pipe contour in the immediate area and on both sides of the reference notches. The notches shall be sufficiently separated from each other in the longitudinal direction and from any remaining reinforcement to give clearly identifiable separate ultrasonic signal responses. The full signal amplitude from each of such notches shall be used to set the trigger/alarm level of the equipment.

As an alternative to the use of acceptance Level U2 notches for equipment standardization, it is permissible, if agreed, to use a fixed-depth internal and external notch and increase the inspection sensitivity by electronic means (i.e. increase in decibels). In this case (known as the “two-lambda method”), the depth of the notches shall be twice the wavelength at the ultrasonic frequency in use. The wavelength, λ, expressed in meters (feet), is given by Equation (K.1):

$$\lambda = \frac{V_t}{f} \tag{K.1}$$

where

V_t is transverse ultrasonic velocity, expressed in meters per second (feet per second);

f is frequency, expressed in hertz (cycles per second).

EXAMPLE At 4 MHz test frequency, the wavelength is 0.8 mm (0.031 in.) and the notch depth is 1.6 mm (0.063 in.).

The required increase in inspection sensitivity shall be based on pipe thickness, and the manufacturer shall demonstrate to the satisfaction of the purchaser that the inspection sensitivity achieved is essentially equivalent to that achieved when using acceptance level U2 notches.

d) The manufacturer may apply the provisions of K.5.3 to retest the suspect areas.

K.5.1.2 For SAWH pipe, the full length of the coil/plate end weld shall be ultrasonically inspected using the same inspection sensitivity and parameters as used on the helical seam weld in accordance with K.5.1.1.

In addition, the T-joints, where the extremities of the coil/plate end weld meet the helical seam weld, shall be subjected to radiographic inspection in accordance with E.4.

K.5.1.3 For jointers, the full length of the girth weld shall be ultrasonically inspected using the same inspection sensitivity and parameters as used on the helical or longitudinal seam weld in accordance with K.5.1.1.

In addition, the T-joints, where the girth weld intersects the longitudinal seam in SAWL pipe or the helical seam in SAWH pipe, shall be subjected to radiographic inspection in accordance with E.4.

K.5.2 Laminar Imperfections in the Pipe Body and on the Strip/Plate Edges

K.5.2.1 The pipe or strip/plate body shall be ultrasonically inspected for the detection of laminar imperfections in accordance with ISO 10893-9 to acceptance limits for the relevant service condition as given in Table K.1, with a coverage of ≥ 20 %.

Such inspection may be carried out in the strip/plate mill or in the pipe mill.

K.5.2.2 The strip/plate edges, including those adjacent to the coil/plate end weld of helical seam pipe, shall be ultrasonically inspected over a width of 15 mm (0.6 in.) for the detection of laminar imperfections in accordance with ISO 10893-9 to acceptance limits as given in Table K.1 for strip/plate edges or areas adjacent to the weld seam.

K.5.3 Nondestructive Inspection of the Weld Seam at the Pipe Ends/Repaired Areas

The length of weld seam at pipe ends that cannot be inspected by the automatic ultrasonic equipment and repaired areas of the weld seam (see C.4) shall be subjected to the following:

a) for the detection of longitudinal imperfections, manual or semi-automatic ultrasonic inspection using the same inspection sensitivity and inspection parameters as is specified in K.5.1.1 or, if agreed, radiographic inspection in accordance with E.4;

b) for the detection of transverse imperfections, a manual/semi-automatic ultrasonic inspection using the same inspection sensitivity and parameters as is specified in K.5.1.1 or a radiographic inspection in accordance with E.4.

For manual ultrasonic inspection, the scanning speed shall be ≤ 150 mm/s (6 in./s).

K.5.4 Supplementary Nondestructive Inspection Operation

If agreed, the external and internal surfaces of the ultimate 50 mm (2.0 in.) length of weld seam at both ends of each pipe shall be subjected to magnetic particle inspection in accordance with ISO 10893-5 or ASTM E709. Any indications in excess of 3.0 mm (0.12 in.) shall be investigated and treated in accordance with C.2.

Annex L
(informative)

Steel Designations

Table L.1 gives guidance on steel designations (steel numbers) that are used in Europe additionally to the steel name.

Table L.1—List of Corresponding Additional Steel Designations (Steel Numbers) for Use in Europe

	Steel Name in Accordance with API 5L	Steel Number in Accordance with EN 10027-2 [22]
Steel grades for PSL 1 pipe in Table 4 [a]	L175	1.8700
	L175P	1.8707
	L210	1.8713
	L245	1.8723
	L290	1.8728
	L320	1.8729
	L360	1.8730
	L390	1.8724
	L415	1.8725
	L450	1.8726
	L485	1.8727
Steel grades for PSL 2 pipe in Table 5 [a]	L245R	1.8788
	L290R	1.8789
	L245N	1.8790
	L290N	1.8791
	L320N	1.8792
	L360N	1.8793
	L390N	1.8970
	L415N	1.8736
	L245Q	1.8737
	L290Q	1.8738
	L320Q	1.8739
	L360Q	1.8741
	L390Q	1.8740
	L415Q	1.8742
	L450Q	1.8743
	L485Q	1.8744
	L555Q	1.8745
	L625Q	1.8764
	L690Q	1.8765
	L245M	1.8746
	L290M	1.8747
	L320M	1.8748
	L360M	1.8749
	L390M	1.8971
	L415M	1.8752
	L450M	1.8754
	L485M	1.8756
	L555M	1.8758
	L625M	1.8753
	L690M	1.8979
	L830M	1.8755
Steel grades for PSL 2 pipe for sour service in Table H.1 [a]	L245NS	1.1020
	L290NS	1.1021
	L320NS	1.1022
	L360NS	1.8757
	L245QS	1.1025
	L290QS	1.1026
	L320QS	1.1027
	L360QS	1.8759
	L390QS	1.8760
	L415QS	1.8761
	L450QS	1.8762
	L485QS	1.8763
	L245MS	1.1030
	L290MS	1.1031
	L320MS	1.1032
	L360MS	1.1033
	L390MS	1.1034
	L415MS	1.8766
	L450MS	1.8767
	L485MS	1.8768
Steel grades for PSL 2 pipe for offshore service in Table J.1 [a]	L245NO	1.1040
	L290NO	1.1041
	L320NO	1.1042
	L360NO	1.8778
	L245QO	1.1045
	L290QO	1.1046
	L320QO	1.1047
	L360QO	1.8771
	L390QO	1.8772
	L415QO	1.8773
	L450QO	1.8774
	L485QO	1.8775
	L555QO	1.8776
	L245MO	1.1050
	L290MO	1.1051
	L320MO	1.1052
	L360MO	1.8781
	L390MO	1.8782
	L415MO	1.8783
	L450MO	1.8784
	L485MO	1.8785
	L555MO	1.8786
	L625QO	1.8777
	L690QO	1.8779

[a] Table numbers for API 5L only.

Annex M
(normative)

Specification for Welded Jointers

M.1 Method and Qualification

M.1.1 Pipe sections joined according to this annex shall be of the same nominal wall thickness and grade.

NOTE Double joints are not within the scope of API 5L. Double joints are defined as lengths of pipe welded together by parties other than the manufacturer, or lengths welded together by the manufacturer in accordance with requirements other than those in this annex.

M.1.2 Welding that uses deposited filler metal and is often considered to be sound practice shall be permitted unless the purchaser specifies a particular method.

M.1.3 A documented procedure shall be established to avoid environmental contamination of welding consumables.

M.1.4 Welding procedures, welders and welding machine operators (hereafter called operators) shall be qualified in accordance with API 1104, ASME Section IX, or ISO 15614-1 or an equivalent standard approved by the purchaser. Prior to destructive qualification testing, NDT should meet the requirements of Annex E or Annex K.

For welding procedure qualification, weld and HAZ CVN and hardness testing is considered good practice. These additional tests should be considered, and acceptance criteria defined, by agreement between manufacturer and purchaser.

M.1.5 Copies of the WPS and procedure qualification record shall be provided to the purchaser upon request.

M.2 Process Testing

M.2.1 Jointer welds shall be tested by destructive means at a minimum of 1 per 100 welded jointers with a minimum of 1 test weld per wall thickness and grade production run. The qualification weld may serve as the initial process test. As a minimum process testing shall include 1 weld tensile, 1 root and 1 face bend. As a minimum, these tests shall meet the requirements of the qualification standard.

M.2.2 In the event of a weld test failure, two additional weld tests shall be cut, one sample from the jointer welded just prior to the failure and one sample from the jointer welded just after the failure. If the retest on the jointer weld made just prior to the initial failure does not pass, the two jointer welds made just prior to it shall be retested. If either of these two jointer welds fails, retesting shall continue on each jointer weld until two such welds pass in succession. If the retest on the jointer weld made just after the initial failure does not pass, the two jointer welds made just after it shall be retested. If either of these two jointer welds fails, retesting shall continue on each jointer weld until two such welds pass in succession.

M.3 Workmanship and Inspection

M.3.1 The ends of the pipe to be welded together shall be prepared in accordance with the qualified WPS.

M.3.2 Prepared pipe ends do not require pipe seam radiography prior to jointer welding.

M.3.3 The completed jointers shall be straight within the limits of 9.11.3.4. Completed jointers shall not be straightened by bending at the jointer welds.

M.3.4 Each weld shall have a substantially uniform cross-section around the entire circumference of the pipe. At no point shall its as-deposited crowned surface be below the outside surface of the parent metal, nor shall it rise above the parent metal by more than the limits specified in Table 16 if submerged-arc welded or by more than 1.6 mm (0.063 in.) if welded by another process.

M.3.5 Unless otherwise agreed, there shall be 50 mm to 200 mm (2.0 in. to 8.0 in.) of circumferential separation between longitudinal-seam welds at jointer welds.

M.3.6 There shall be at least 50 mm (2.0 in.) of circumferential separation between helical seam welds and coil/plate end welds at jointer welds.

M.3.7 At the jointer weld, the pipe sections shall not be offset by more than 3.2 mm (0.125 in.), except where variation is caused by variations of the pipe end dimensions within the pipe purchase specification tolerances and such variations have been distributed essentially uniformly around the circumference of the pipe.

M.3.8 Undercut shall be treated in accordance with 9.10.2 a) and b).

M.4 Marking

M.4.1 Each jointer shall be legibly marked to identify the welder or operator.

M.4.2 In order to identify which pipe and heat numbers apply to each segment of a jointer length, the pipe identity information shall be marked circumferentially at each end in the following order with the observer looking into the pipe, see Figure M.1:

Top line (furthest from the observer) – jointer segment nearest observer
Middle line – middle jointer segment
Bottom line – jointer segment farthest away from the observer

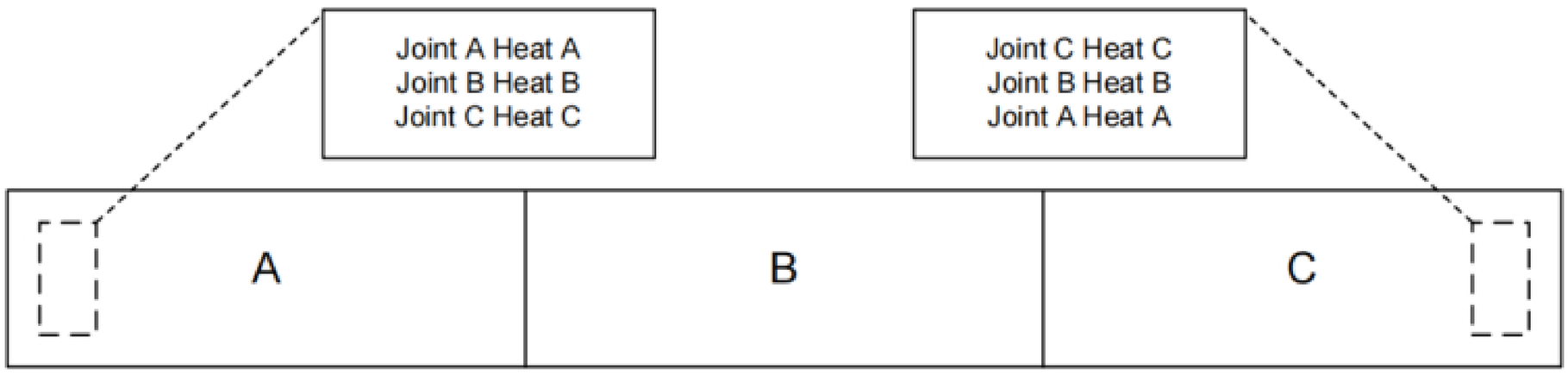

Figure M.1—Segment Identification Marking Sequence Example

M.5 Nondestructive Inspection

The full length (100 %) of jointer welds shall be nondestructively inspected in accordance with Annex E or Annex K, whichever is applicable, using radiographic or ultrasonic methods or a combination thereof.

M.6 Weld Repair

Repair of the jointer weld shall be in accordance with Annex D.

Annex N
(normative)

PSL 2 Pipe Ordered for Applications Requiring Longitudinal Plastic Strain Capacity

N.1 General

This annex specifies additional provisions that apply for PSL 2 pipe that is ordered for applications with designs requiring longitudinal plastic strain capacity (strains > 0.5 %) [see 7.2.c) 59)].

NOTE This annex does not contain guidance on the design of pipelines to withstand longitudinal strains (strain-based design); since the requirements for pipe and the required strain capacity for specific applications will vary, this annex does not prescribe specific values for required properties; the required properties are to be determined by the designer of the pipeline and to be specified by the purchaser of the pipe; this annex provides a format for the purchaser of the pipe to specify properties that are known to affect the longitudinal strain capacity of pipelines.

N.2 Additional Information to Be Supplied by the Purchaser

The purchase order shall indicate which of the following provisions apply for the specific order item:

a) steel casting method for strip or plate used for the manufacture of welded pipe (see N.3.3.2.1);

b) ultrasonic inspection of strip or plate for laminar imperfections (see N.3.3.2.4);

c) the delivery of jointers (see N.3.3.3);

d) chemical composition for intermediate grades (see N.4.1.1);

e) chemical composition for pipe with t > 25.0 mm (0.984 in.) (see N.4.1.2);

f) carbon equivalent limit for steel Grade L555QP or X80QP (see Table N.1);

g) chemical composition limits [see Table N.1, footnote d)];

h) requirements for longitudinal tensile properties (see N.4.2.2);

i) aging conditions for longitudinal tensile test pieces and method of heating the sample (see N.4.2.3);

j) requirement for fully rounded stress-strain curve shape (see N.4.2.4);

k) additional requirements on stress-strain curve shape (see N.4.2.5);

l) limit on the difference between the maximum and minimum values of actual longitudinal yield strength (see N.4.2.6);

m) more stringent out-of-roundness tolerances (see N.6.1);

n) more stringent wall thickness tolerances (see N.6.2);

o) diameter and out-of-roundness tolerances for SMLS pipe with t > 25.0 mm (0.984 in.) [see Table N.2, footnote b)];

p) use of inside diameter to determine diameter and out-of-roundness tolerances with $D \geq 219.1$ mm (8.625 in.) [see Table N.2, footnote c)];

q) hardness test of the pipe body of seamless, EW, and SAW pipe and of the seam weld and HAZ of EW and SAW pipe (see Table N.6);

r) CTOD testing (see N.8.2.2 and Table N.6);

s) use of the ring expansion test for transverse yield strength determinations [see Table N.7, footnote c)];

t) alternatives to full-thickness strip test pieces for longitudinal testing of welded pipe (see N.8.3.1);

u) the use of three hardness impressions at each through-thickness location [see N.8.3.3.2 c)];

v) the use of an alternative distance from the weld line for parent metal hardness impressions for welded pipe [see N.8.3.3.3 c)];

w) for pipe with $t \geq 5.0$ mm (0.197 in.), ultrasonic inspection for laminar imperfections within extended length of 100 mm (4.0 in.) at the pipe ends (see K.2.1.3);

x) magnetic particle inspection for laminar imperfections at each pipe end face/bevel (see K.2.1.4);

y) ultrasonic inspection to verify conformance with the applicable requirements given in Table K.1 (see K.3.2.2);

z) increased coverage for ultrasonic thickness measurements for SMLS pipe (see K.3.3);

aa) application of one or more of the supplementary nondestructive inspection operations for SMLS pipe (see K.3.4);

bb) acceptance Level L2/C or L2 for nondestructive inspection of the weld seam of HFW pipe (see K.4.1);

cc) ultrasonic inspection of the pipe body of HFW pipe for laminar imperfections (see K.4.2);

dd) ultrasonic inspection of the strip/plate edges or areas adjacent to the weld for laminar imperfections (see K.4.3);

ee) nondestructive inspection of the pipe body of HFW pipe using the ultrasonic or flux-leakage method (see K.4.4);

ff) use of fixed-depth notches for equipment standardization [see K.5.1.1 c)];

gg) radiographic inspection of the pipe ends (noninspected pipe ends) and repaired areas [see K.5.3 a)];

hh) magnetic particle inspection of the weld seam at the pipe ends of SAW pipe (see K.5.4).

N.3 Manufacturing

N.3.1 Manufacturing Procedure

All pipe shall be manufactured in accordance with a manufacturing procedure that has been qualified in accordance with Annex B, with supplementary testing of the properties required in this annex.

The users should consider including additional requirements specific to the intended application as part of the manufacturing procedure qualification tests. Additional items that should be considered for specific applications are listed below:

a) weldability testing, including suitable toughness tests of the HAZ of girth welds;

b) coating simulation tests to characterize the effects of coating thermal cycles on pipe properties;

c) tests, including small-scale, medium-scale, and/or full-scale testing, to qualify tensile, and compressive strain capacity of the pipe as a part of qualification;

d) for reel lay applications (i.e. strain before service): reeling simulation tests, strain-aging tests, and characterization of properties after reeling, including sour service properties, if applicable.

N.3.2 Steelmaking

The steel shall be made to a clean steel practice, using either the basic oxygen steelmaking process or the electric furnace steelmaking process and shall be fully killed.

N.3.3 Pipe Manufacturing

N.3.3.1 SMLS Pipe

SMLS pipe shall be manufactured from continuously (strand) cast or ingot steel. If the process of cold finishing is used, this shall be stated in the inspection document or mill certificate.

N.3.3.2 Welded Pipe

N.3.3.2.1 Unless otherwise agreed, strip and plate used for the manufacture of welded pipe shall be rolled from continuously (strand) cast or pressure cast slabs. The pipe shall be SAWL, SAWH, or HFW.

N.3.3.2.2 For HFW pipe, the abutting edges of the strip or plate shall be sheared, milled, or machined before welding.

N.3.3.2.3 Strip and plate used for the manufacture of welded pipe shall be inspected visually after rolling. Visual inspection of strip used for the manufacture of welded pipe may be either of the uncoiled strip or of the coil edges.

N.3.3.2.4 If agreed, such strip and plate shall be inspected ultrasonically for laminar imperfections or mechanical damage in accordance with Annex K, either before or after cutting the strip or plate, or the completed pipe shall be subjected to full-body inspection, including ultrasonic inspection.

N.3.3.2.5 Intermittent tack welding of the SAWL groove shall not be used, unless the purchaser has approved data furnished by the manufacturer to demonstrate that the mechanical properties specified for the pipe are obtainable at both the tack weld and intermediate positions.

N.3.3.3 Jointers

Jointers shall not be delivered unless otherwise agreed.

NOTE If the delivery of jointers is agreed, it is the responsibility of the purchaser and manufacturer to agree on requirements for jointer welds, procedures for welding, and qualification tests; additional requirements may be needed for high strain applications since tensile strain capacity of girth welds is dependent on weld tensile properties, toughness properties, high-low misalignment, and flaw acceptance criteria.

N.4 Acceptance Criteria

N.4.1 Chemical Composition

N.4.1.1 For pipe with $t \leq 25.0$ mm (0.984 in.), the chemical composition for standard grades shall be as given in Table N.1 and the chemical composition for intermediate grades shall be as agreed, but consistent with that given for the standard grades in Table N.1. The pipe designation shall be as given in Table N.1 and consists of an alpha or alphanumeric designation that identifies the steel grade, followed by a suffix that consists of a letter (N, Q, or M) that identifies the delivery condition and a second letter (P) that identifies the service condition.

N.4.1.2 For pipe with $t > 25.0$ mm (0.984 in.), the chemical composition shall be as agreed, with the requirements given in Table N.1 being amended as appropriate.

Table N.1—Chemical Composition for Pipe with $t \leq 25.0$ mm (0.984 in.)

Steel Grade	Mass Fraction Based on Heat and Product Analyses (maximum) %									Carbon Equivalent [a] (maximum) %	
	C [b]	Si	Mn [b]	P	S	V	Nb	Ti	Other [c]	CE_{IIW}	CE_{Pcm}
SMLS and Welded Pipe											
L245NP or BNP	0.14	0.40	1.35	0.020	0.010	[d]	[d]	0.04	[e,f]	0.36	0.19 [g]
L290NP or X42NP	0.14	0.40	1.35	0.020	0.010	0.05	0.05	0.04	[f]	0.36	0.19 [g]
L320NP or X46NP	0.14	0.40	1.40	0.020	0.010	0.07	0.05	0.04	[e,f]	0.38	0.20 [g]
L360NP or X52NP	0.16	0.45	1.65	0.020	0.010	0.10	0.05	0.04	[e,h]	0.43	0.22 [g]
L245QP or BQP	0.14	0.40	1.35	0.020	0.010	0.04	0.04	0.04	[f]	0.34	0.19 [g]
L290QP or X42QP	0.14	0.40	1.35	0.020	0.010	0.04	0.04	0.04	[f]	0.34	0.19 [g]
L320QP or X46QP	0.15	0.45	1.40	0.020	0.010	0.05	0.05	0.04	[f]	0.36	0.20 [g]
L360QP or X52QP	0.16	0.45	1.65	0.020	0.010	0.07	0.05	0.04	[e,h]	0.39	0.20 [g]
L390QP or X56QP	0.16	0.45	1.65	0.020	0.010	0.07	0.05	0.04	[e,h]	0.40	0.21 [g]
L415QP or X60QP	0.16	0.45	1.65	0.020	0.010	0.08	0.05	0.04	[e,h]	0.41	0.22 [g]
L450QP or X65QP	0.16	0.45	1.65	0.020	0.010	0.09	0.05	0.06	[e,h]	0.42	0.22 [g]
L485QP or X70QP	0.17	0.45	1.75	0.020	0.010	0.10	0.05	0.06	[e,h]	0.42	0.23 [g]
L555QP or X80QP	0.17	0.45	1.85	0.020	0.010	0.10	0.06	0.06	[e,h]	As agreed	
Welded Pipe											
L245MP or BMP	0.12	0.40	1.25	0.020	0.010	0.04	0.04	0.04	[f]	—	0.19
L290MP or X42MP	0.12	0.40	1.35	0.020	0.010	0.04	0.04	0.04	[f]	—	0.19
L320MP or X46MP	0.12	0.45	1.35	0.020	0.010	0.05	0.05	0.04	[f]	—	0.20
L360MP or X52MP	0.12	0.45	1.65	0.020	0.010	0.05	0.05	0.04	[e,h]	—	0.20
L390MP or X56MP	0.12	0.45	1.65	0.020	0.010	0.06	0.08	0.04	[e,h]	—	0.21
L415MP or X60MP	0.12	0.45	1.65	0.020	0.010	0.08	0.08	0.06	[e,h]	—	0.21
L450MP or X65MP	0.12	0.45	1.65	0.020	0.010	0.10	0.08	0.06	[e,h]	—	0.22
L485MP or X70MP	0.12	0.45	1.75	0.020	0.010	0.10	0.08	0.06	[e,h]	—	0.22
L555MP or X80MP	0.12	0.45	1.85	0.020	0.010	0.10	0.08	0.06	[e,h]	—	0.24

[a] Based on product analysis (see 9.2.4 and 9.2.5); the CE_{IIW} limits apply if the carbon mass fraction is greater than 0.12 % and the CE_{Pcm} limits apply if the carbon mass fraction is less than or equal to 0.12 %.

[b] For each reduction of 0.01 % below the specified maximum for carbon, an increase of 0.05 % above the specified maximum for manganese is permissible, up to a maximum increase of 0.20 %.

[c] $Al_{total} \leq 0.060$ %; N ≤ 0.012 %; Al/N ≥ 2:1 (not applicable to titanium-killed steel or titanium-treated steel).

[d] Unless otherwise agreed, the sum of the niobium and vanadium concentrations shall be ≤ 0.06 %.

[e] The sum of the niobium, vanadium, and titanium concentrations shall be ≤ 0.15 %.

[f] Cu ≤ 0.35 %; Ni ≤ 0.30 %; Cr ≤ 0.30 %; Mo ≤ 0.10 %; B ≤ 0.0005 %.

[g] For SMLS pipe, the listed value is increased by 0.03 percentage points, up to a maximum of 0.25 %.

[h] Cu ≤ 0.50 %; Ni ≤ 0.50 %; Cr ≤ 0.50 %; Mo ≤ 0.50 %; B ≤ 0.0005 %.

N.4.2 Tensile Properties

N.4.2.1 The tensile properties requirements for PSL 2 pipe in the main body of the specification (see Table 7) shall apply for the tensile tests required by the main body. This annex specifies additional requirements for longitudinal tensile properties.

N.4.2.2 Requirements for the following longitudinal tensile properties shall be by agreement:

a) minimum and maximum yield strength ($R_{t0.5}$),

b) minimum and maximum tensile strength (R_m),

c) maximum yield to tensile ratio ($R_{t0.5}/R_m$), and

d) minimum uniform elongation (U_{EL}).

NOTE For aged longitudinal tensile tests and when longitudinal tensile tests are not required by this specification, it is not required that the agreed tensile property requirements for the longitudinal direction comply with the requirements in Table 7. (For example, it is permissible to specify a lower longitudinal yield strength than what the main body requires for transverse tensile tests.)

N.4.2.3 If agreed, the requirements for the tensile properties in the longitudinal direction shall apply after aging the steel for a minimum time and temperature specified by the purchaser. The method of heating the sample shall be agreed.

NOTE Exposure of the pipe to elevated temperatures may alter the tensile properties of the pipe steel; increases in strength and $R_{t0.5}/R_m$ and decreases in uniform elongation have been observed after exposure of pipe steel to thermal cycles often used in the application of corrosion protection coatings; pipe that has been tempered or normalized at temperatures higher than the coating application temperature is not expected to be affected.

N.4.2.4 If agreed for welded pipe, the longitudinal stress-strain curve shall have a fully rounded shape (continuous yielding with no sharp yield point or Lüders plateau present).

N.4.2.5 Additional requirements on the stress-strain curve shape and strain hardening behavior may be agreed.

NOTE Work hardening after the yield point is known to affect compressive strain capacity; ratios between stresses related to specific strains on stress-strain curves can describe the strain hardening behavior; requirements for specific stress ratios needed to ensure compressive strain capacity of a pipeline can be determined by numerical modeling and/or full-scale testing.

N.4.2.6 If agreed, the difference between the maximum and minimum values of actual longitudinal yield strength of pipe in an order item shall not exceed 100 MPa (14.5 ksi).

N.4.3 Hardness Test

For test pieces subjected to a hardness test, the hardness in the pipe body, weld, and HAZ shall be:

a) ≤ 270 HV10 or ≤ 25 HRC for grades ≤ L450 or X65, and

b) ≤ 300 HV10 or ≤ 30 HRC for grades > L450 or X65 and ≤ L555 or X80.

N.5 Other Surface Imperfections

Surface imperfections, other than undercuts in SAW pipe and arc burns in any pipe, found by visual inspection, shall be investigated, classified, and treated as follows.

a) Imperfections that have a depth ≤ 0.05t and do not encroach on the minimum permissible wall thickness shall be classified as acceptable imperfections and treated in accordance with C.1.

NOTE There is a possibility of special requirements for disposition of surface imperfections being specified in the purchase order if the pipe is subsequently to be coated.

b) Imperfections that have a depth > 0.05t and do not encroach on the minimum permissible wall thickness shall be classified as defects and shall be treated in accordance with C.2 or C.3.

c) Imperfections that encroach on the minimum permissible wall thickness shall be classified as defects and treated in accordance with C.3.

N.6 Tolerances for Diameter, Wall Thickness, and Straightness

N.6.1 Except as allowed by C.2.3, the diameter and out-of-roundness shall be within the tolerances given in Table N.2. If agreed, more stringent out-of-roundness tolerances shall be required.

N.6.2 The wall thickness shall be within the tolerances given in Table N.3. If agreed, more stringent wall thickness tolerances shall be required.

NOTE Out-of-roundness and wall thickness variation at pipe ends affect high-low misalignment at girth welds, which influences tensile strain capacity of girth welds.

N.6.3 Geometric deviations from the normal cylindrical contour of the pipe (e.g. flat spots and peaks) that occur as a result of the pipe forming process or manufacturing operations and that exceed 0.005D or 2.0 mm (0.080 in.) in depth, whichever is less, measured as the gap between the extreme point of the deviation and the prolongation of the normal contour of the pipe, shall be considered defects and shall be treated in accordance with C.3 b) or C.3 c).

N.6.4 The tolerances for straightness shall be as follows: the total deviation from a straight line, over the entire pipe length, shall be ≤ 0.15 % of the pipe length.

N.6.5 For seamless pipe, eccentricity at pipe ends shall not exceed the values given in Table N.4. Eccentricity shall be defined as the difference between the maximum and minimum wall thickness in a circumferential section.

Table N.2—Tolerances for Diameter and Out-of-roundness

Specified Outside Diameter D mm (in.)	Diameter Tolerances [d] mm (in.)				Out-of-roundness Tolerances mm (in.)	
	Pipe Except the End [a]		Pipe End [a,b,c]		Pipe Except the End [a]	Pipe End [a,b,c]
	SMLS Pipe	Welded Pipe	SMLS Pipe	Welded Pipe		
< 60.3 (2.375)	±0.5 (0.020) or ±0.0075D, whichever is the greater	±0.5 (0.020) or ±0.0075D, whichever is the greater, but maximum of ±3.2 (0.125)	±0.5 (0.020) or ±0.005D, whichever is the greater, but maximum of ±1.6 (0.063)		0.9 (0.036)	0.6 (0.024)
≥ 60.3 (2.375) to 610 (24.000)					0.015D	0.01D
> 610 (24.000) to 1422 (56.000)	±0.01D	±0.005D, but maximum of ±4.0 (0.160)	±2.0 (0.079)	±1.6 (0.063)	0.01D but maximum of 10 (0.4), for $D/t \leq 75$ By agreement for $\frac{D}{t} > 75$	0.0075D but maximum of 5 (0.2), for $D/t \leq 75$ By agreement for $\frac{D}{t} > 75$
> 1422 (56.000)	As agreed					

[a] The pipe end includes a length of 100 mm (4.0 in.) at each of the pipe extremities.

[b] For SMLS pipe, the tolerances apply for $t \leq 25.0$ mm (0.984 in.), and the tolerances for heavier wall pipe shall be as agreed.

[c] For pipe with $D \geq 219.1$ mm (8.625 in.), the diameter tolerance and the out-of-roundness tolerance may be determined using the calculated inside diameter (the specified outside diameter minus two times the specified wall thickness) or measured inside diameter rather than the specified outside diameter (see 10.2.8.3).

[d] For determining compliance to diameter tolerances, the pipe diameter is defined as the circumference of the pipe in any circumferential plane divided by pi (π).

Table N.3—Tolerances for Wall Thickness

Wall Thickness, *t* mm (in.)	**Tolerances** [a] mm (in.)
SMLS Pipe	
< 4.0 (0.157)	+0.6 (0.024) –0.5 (0.020)
≥ 4.0 (0.157) to < 10.0 (0.394)	+0.15*t* –0.125*t*
≥ 10.0 (0.394) to < 25.0 (0.984)	+0.125*t* –0.125*t*
≥ 25.0 (0.984)	+3.7 (0.146) or +0.1*t*, whichever is the greater [b] –3.0 (0.120) or –0.1*t*, whichever is the greater [b]
HFW Pipe [c,d]	
≤ 6.0 (0.236)	±0.4 (0.016)
> 6.0 (0.236) to ≤ 15.0 (0.591)	±0.7 (0.028)
> 15.0 (0.591)	±1.0 (0.039)
SAW Pipe [c,d]	
≤ 6.0 (0.236)	±0.5 (0.020)
> 6.0 (0.236) to ≤ 10.0 (0.394)	±0.7 (0.028)
> 10.0 (0.394) to ≤ 20.0 (0.787)	±1.0 (0.039)
> 20.0 (0.787)	+1.5 (0.060) –1.0 (0.039)

[a] If the purchase order specifies a minus tolerance for wall thickness smaller than the applicable value given in this table, the plus tolerance for wall thickness shall be increased by an amount sufficient to maintain the applicable tolerance range.

[b] For pipe with $D \geq 355.6$ mm (14.000 in.) and $t \geq 25.0$ mm (0.984 in.) the tolerance is $^{+12.5\%}_{-12.5\%}$.

[c] The plus tolerance for wall thickness does not apply to the weld area.

[d] See 9.13.2 for additional restrictions.

Table N.4—Eccentricity at Pipe Ends for Seamless Pipe

Wall Thickness, *t* mm (in.)	**Eccentricity Tolerances** mm (in.)
SMLS Pipe	
< 4.0 (0.157)	+1.0 (0.040)
≥ 4.0 (0.157) to < 10.0 (0.394)	0.22*t*
≥ 10.0 (0.394) to < 25.0 (0.984)	0.2*t*

N.7 Tolerances for the Weld Seam (Radial Offset of Strip/Plate Edges)

For HFW pipe, the radial offset of the strip/plate edges [see Figure 4 a)] shall not cause the remaining wall thickness at the weld to be less than the minimum permissible wall thickness.

For SAW pipe, the inside and outside radial offsets of the strip/plate edges [see Figure 4 b)] shall not exceed the applicable value given in Table N.5.

Table N.5—Maximum Permissible Radial Offset for SAW Pipe

Specified Wall Thickness, *t* mm (in.)	**Maximum Permissible Radial Offset** [a] mm (in.)
≤ 13.0 (0.512)	1.3 (0.051)
> 13.0 (0.512) to ≤ 20.0 (0.787)	0.1*t*
> 20.0 (0.787)	2.0 (0.079)
[a] These limits apply also to strip/plate end welds.	

N.8 Inspection

N.8.1 Specific Inspection

The frequency of inspection shall be as given in Table 18, except as specifically modified in Table N.6.

Table N.6—Inspection Frequency

No	Type of Inspection	Type of Pipe	Frequency of Inspection
1	Tensile testing of the pipe body of pipe with D < 508 mm (20.000 in.)	SMLS, HFW, SAWL, or SAWH	Once per test unit of not more than 100 lengths of pipe with the same cold-expansion ratio [a,e]
2	Tensile testing of the pipe body of pipe with D ≥ 508 mm (20.000 in.)	SMLS, HFW, SAWL, or SAWH	Once per test unit of not more than 50 lengths of pipe with the same cold-expansion ratio [a,e]
3	Tensile testing of the longitudinal or helical seam weld of welded pipe with 219.1 mm (8.625 in.) ≥ D < 508 mm (20.000 in.)	HFW, SAWL, or SAWH	Once per test unit of not more than 100 lengths of pipe with the same cold-expansion ratio [a,b]
4	Tensile testing of the longitudinal or helical seam weld of welded pipe with D ≥ 508 mm (20.000 in.)	HFW, SAWL, or SAWH	Once per test unit of not more than 50 lengths of pipe with the same cold-expansion ratio [a,b,c]
5	Tensile testing of the strip/plate end weld of SAW pipe with D ≥ 219.1 mm (8.625 in.)	SAWH	Once per test unit of not more than 50 lengths of pipe with the same cold-expansion ratio [a,b,d]
6	CVN impact testing of the pipe body of pipe with 114.3 mm (4.500 in.) ≤ D < 508 mm (20.000 in.) and specified wall thickness as given in Table 22	SMLS, HFW, SAWL, or SAWH	Once per test unit of not more than 100 lengths of pipe with the same cold-expansion ratio [a]
7	CVN impact testing of the pipe body of pipe with D ≥ 508 mm (20.000 in.) and specified wall thickness as given in Table 22	SMLS, HFW, SAWL, or SAWH	Once per test unit of not more than 50 lengths of pipe from the same heat of steel and with the same cold-expansion ratio [a]
8	CVN impact testing of the longitudinal or helical seam weld of welded pipe with 114.3 mm (4.500 in.) ≤ D < 508 mm (20.000 in.) and specified wall thickness as given in Table 22	HFW, SAWL, or SAWH	Once per test unit of not more than 100 lengths of pipe with the same cold-expansion ratio [a,b]
9	CVN impact testing of the longitudinal or helical-seam weld of welded pipe with D ≥ 508 mm (20.000 in.) and specified wall thickness as given in Table 22	HFW, SAWL, or SAWH	Once per test unit of not more than 50 lengths of pipe with the same cold-expansion ratio [a,b,c]
10	CVN impact testing of the strip/plate end weld of welded pipe with D ≥ 114.3 mm (4.500 in.) and specified wall thickness as given in Table 22	SAWH	Once per test unit of not more than 50 lengths of pipe with the same cold-expansion ratio [a,b,d]
11	If agreed, hardness testing of pipe body and of the longitudinal or helical seam weld and HAZ of welded pipe	SMLS, HFW, SAWL, or SAWH	As agreed
12	Pipe end diameter and pipe end out-of-roundness	SMLS, SAWL, or SAWH	Each pipe
13	Pipe end peaking	SAWL or SAWH	Each pipe
14	Pipe end diameter, pipe end out-of-roundness and pipe end peaking	HFW	Two pipes per coil
15	Pipe body diameter and out-of-roundness for pipe with D ≤168.3 mm (6.625 in.)	SMLS, HFW, SAWL, or SAWH	Once per test unit of not more than 100 lengths of pipe
16	Pipe body diameter and out-of-roundness for pipe with D > 168.3 mm (6.625 in.)	SMLS, HFW, SAWL, or SAWH	Once per test unit of not more than 20 lengths of pipe
17	Nondestructive inspection	SMLS, HFW, SAWL, or SAWH	In accordance with Annex K
18	If agreed, for information purposes only, CTOD test for pipe in Grade ≥ L360 or X52	SAWL or SAWH	Once; for manufacturing procedure qualification only

[a] The cold-expansion ratio is designated by the manufacturer and is derived using the designated before-expansion outside diameter or circumference and the after-expansion outside diameter or circumference; an increase or decrease in the cold-expansion ratio of more than 0.002 requires the creation of a new test unit.

[b] In addition, pipe produced by each welding machine shall be tested at least once per week.

[c] For double-seam pipe, both longitudinal weld seams in the pipe selected to represent the test unit shall be tested.

[d] Applies only to finished helical seam pipe containing strip/plate end welds.

[e] Where Table N.7 requires more than one specimen orientation, one of each orientation shall be taken at the frequency indicated.

N.8.2 Samples and Test Pieces for Mechanical and Technological Tests

N.8.2.1 General

N.8.2.1.1 For tensile tests, CVN impact tests, guided-bend tests, hardness tests, and CTOD tests, the samples shall be taken and the corresponding test pieces prepared in accordance with the applicable reference standard.

N.8.2.1.2 Samples and test pieces for the various test types shall be taken from locations as shown in Figures 5 and 6 and as given in Table N.7, taking into account the supplementary details in 10.2.3.2 to 10.2.3.7, 10.2.4, N.8.2.2, and N.8.2.3.

N.8.2.2 Test Pieces for CTOD Tests

If CTOD testing is agreed, the locations (base metal, HAZ, and/or weld metal) and orientation of test pieces shall be specified on the purchase order (reference ISO 15653 for crack plane orientation codes). Test pieces shall be prepared in accordance with ISO 12737, ISO 15653, ASTM E1820, or BS 7448-1.

N.8.2.3 Samples for Hardness Tests

Samples for hardness tests shall be taken from the end of selected pipes, and, for welded pipe, each sample shall contain a section of the longitudinal or helical seam at its center (see Figure N.1).

Table N.7—Number, Orientation, and Location of Test Pieces per Sample for Mechanical Tests

Type of Pipe	Sample Location	Type of Test	Number, Orientation, and Location of Test Pieces per Sample [a]		
			Specified Outside Diameter D mm (in.)		
			< 219.1 (8.625)	≥ 219.1 (8.625) to < 508 (20.000)	≥ 508 (20.000)
SMLS, not cold-expanded [see Figure 5 a)]	Pipe body	Tensile	1L [b,d]	1L [d]	1L [d]
		CVN	3T	3T	3T
		Hardness	1T	1T	1T
SMLS, cold-expanded [see Figure 5 a)]	Pipe body	Tensile	1L [b,d]	1L and 1T [c]	1L and 1T [c]
		CVN	3T	3T	3T
		Hardness	1T	1T	1T
HFW [see Figure 5 b)]	Pipe body	Tensile	1L90 [b,d]	1L90 and 1T180 [c]	1L90 and 1T180 [c]
		CVN	3T90	3T90	3T90
	Seam weld	Tensile	—	1W	1W
		CVN	3W	3W	3W
		Hardness	1W	1W	1W
	Pipe body and weld	Flattening	As shown in Figure 6		
SAWL [see Figure 5 b)]	Pipe body	Tensile	1L90 [b,d]	1L90 and 1T180 [c]	1L90 and 1T180 [c]
		CVN	3T90	3T90	3T90
	Seam weld	Tensile	—	1W	1W [e]
		CVN	3W and 3HAZ	3W and 3HAZ	3W [e] and 3HAZ [e]
		Guided-bend	2W	2W	2W [e]
		Hardness	1W	1W	1W [e]
SAWH [see Figure 5 c)]	Pipe body	Tensile	1L [b,d]	1L and 1T [c]	1L and 1T [c]
		CVN	3T	3T	3T
	Seam weld	Tensile	—	1W	1W
		CVN	3W and 3HAZ	3W and 3HAZ	3W and 3HAZ
		Guided-bend	2W	2W	2W
		Hardness	1W	1W	1W
	Strip/plate end weld	Tensile	—	1WS	1WS
		CVN	3WS and 3HAZ	3WS and 3HAZ	3WS and 3HAZ
		Guided-bend	2WS	2WS	2WS
		Hardness	1WS	1WS	1WS

[a] See Figure 5 for an explanation of the symbols used to designate orientation and location.

[b] Full-section longitudinal test pieces may be used at the option of the manufacturer.

[c] If agreed, annular test pieces may be used for the determination of transverse yield strength by the hydraulic ring expansion test in accordance with ASTM A370.

[d] If aged longitudinal tensile tests are agreed, two specimens shall be taken, with one aged and one not aged; the unaged specimen shall be tested to meet the requirements of the main body of the standard.

[e] For double-seam pipe, both longitudinal weld seams in the pipe selected to represent the test unit shall be tested.

N.8.3 Test Methods

N.8.3.1 CTOD Test

If CTOD testing is agreed, tests shall be carried out in accordance with ISO 12737, ISO 15653, ASTM E1820, or BS 7448-1. The test temperature shall be as stated in the purchase order.

N.8.3.2 Hardness Test

N.8.3.2.1 Hardness testing on the parent metal shall be performed using the Vickers test in accordance with ISO 6507-1 or ASTM E92 or using the Rockwell test HR15N in accordance with ISO 6508 or ASTM E18. In case of dispute, the Vickers method shall apply.

Hardness testing on the HAZ and weld shall be carried out using the Vickers test in accordance with ISO 6507-1 or ASTM E92.

For pipe body tests and parent metal tests, individual hardness readings exceeding the applicable acceptance limit may be considered acceptable if the average of a minimum of three and maximum of six additional readings taken within close proximity does not exceed the applicable acceptance limit, and no such individual reading exceeds the acceptance limit by more than 10 HV10 units or 2 HRC units, whichever is applicable.

N.8.3.2.2 Hardness test locations for SMLS pipe shall be as shown in Figure N.1 a), except that:

a) for pipe with t < 4.0 mm (0.156 in.), it is necessary to carry out only the mid-thickness traverse;

b) for pipe with 4.0 mm (0.156 in.) ≤ t < 6 mm (0.236 in.), it is necessary to carry out only the inside and outside surface traverses;

c) if agreed, three impressions at each through-thickness location shown in Figure N.1 a) are acceptable.

N.8.3.2.3 Hardness locations shall include the weld cross-section. Indentations shall be made in the parent metal, in the visible HAZ, and at the weld centerline, as shown in Figure N.1 b) or Figure N.1 c), except that:

a) for pipe with t < 4.0 mm (0.156 in.), it is necessary to carry out only the mid-thickness traverse;

b) for pipe with 4.0 mm (0.156 in.) ≤ t < 6 mm (0.236 in.), it is necessary to carry out only the inside and outside surface traverses;

c) if agreed, the distance from the weld line of the indentations in the parent metal may be less than shown in Figure N.1 c) provided these indentations remain located in the parent metal.

N.8.3.3 Longitudinal Tensile Tests

Longitudinal tensile testing shall be performed according to ISO 6892-1 or ASTM A370. If agreed, proportional specimens according to ISO 6892-1 shall be used. In this case, refer to Table 7 for the elongation value and use ISO 2566-1 for the conversion depending on the specimen geometry.

Unless otherwise agreed, longitudinal tensile test specimens for welded pipe shall be full-thickness strip specimens. Longitudinal specimens for seamless pipe shall be either full-thickness strip specimens or round bar specimens. No flattening of longitudinal tensile test specimens is permitted, except for the grip area. To enable measurement of uniform elongation and characterization of the shape of the stress-strain curve, an extensometer shall be used to measure the load versus extension at least until after the

maximum load has been reached. The full stress-strain curve shall be reported. Uniform elongation shall be the percentage total extension at maximum load as described in ISO 6892-1.

N.8.4 Nondestructive Inspection

For nondestructive inspection, see N.2 and Annex K.

N.8.5 Inspection Documents

In addition to the items listed in 10.1.3.2, the following information, as applicable, shall be provided on the inspection certificate for each order item:

a) longitudinal tensile test results and aging temperature and time for longitudinal tensile test pieces, and

b) hardness test results.

N.9 Pipe Markings

In addition to the pipe markings required in 11.2, the pipe markings shall include an identification number that permits the correlation of the product or delivery unit with the related inspection document.

Dimensions in millimeters (inches)

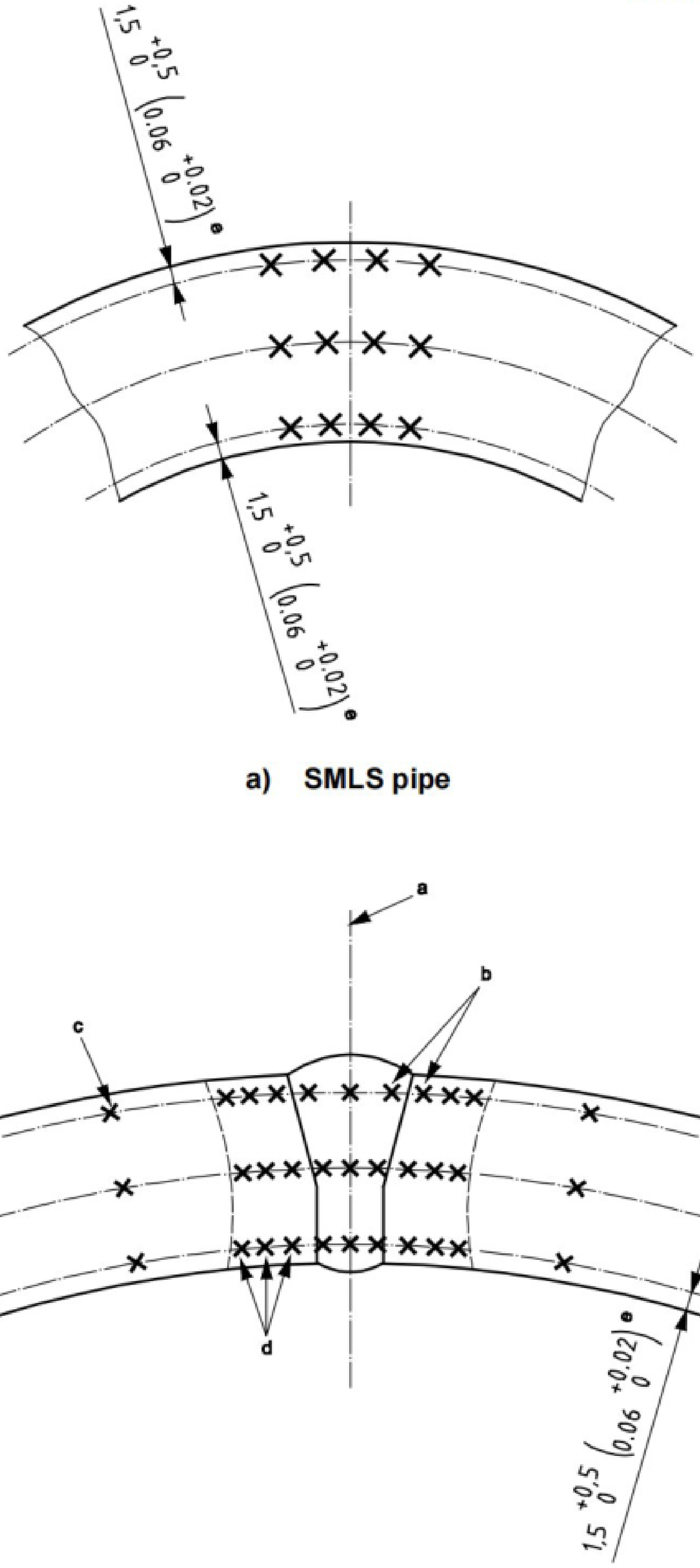

a) SMLS pipe

b) SAW pipe

Figure N.1—Location of Hardness Tests

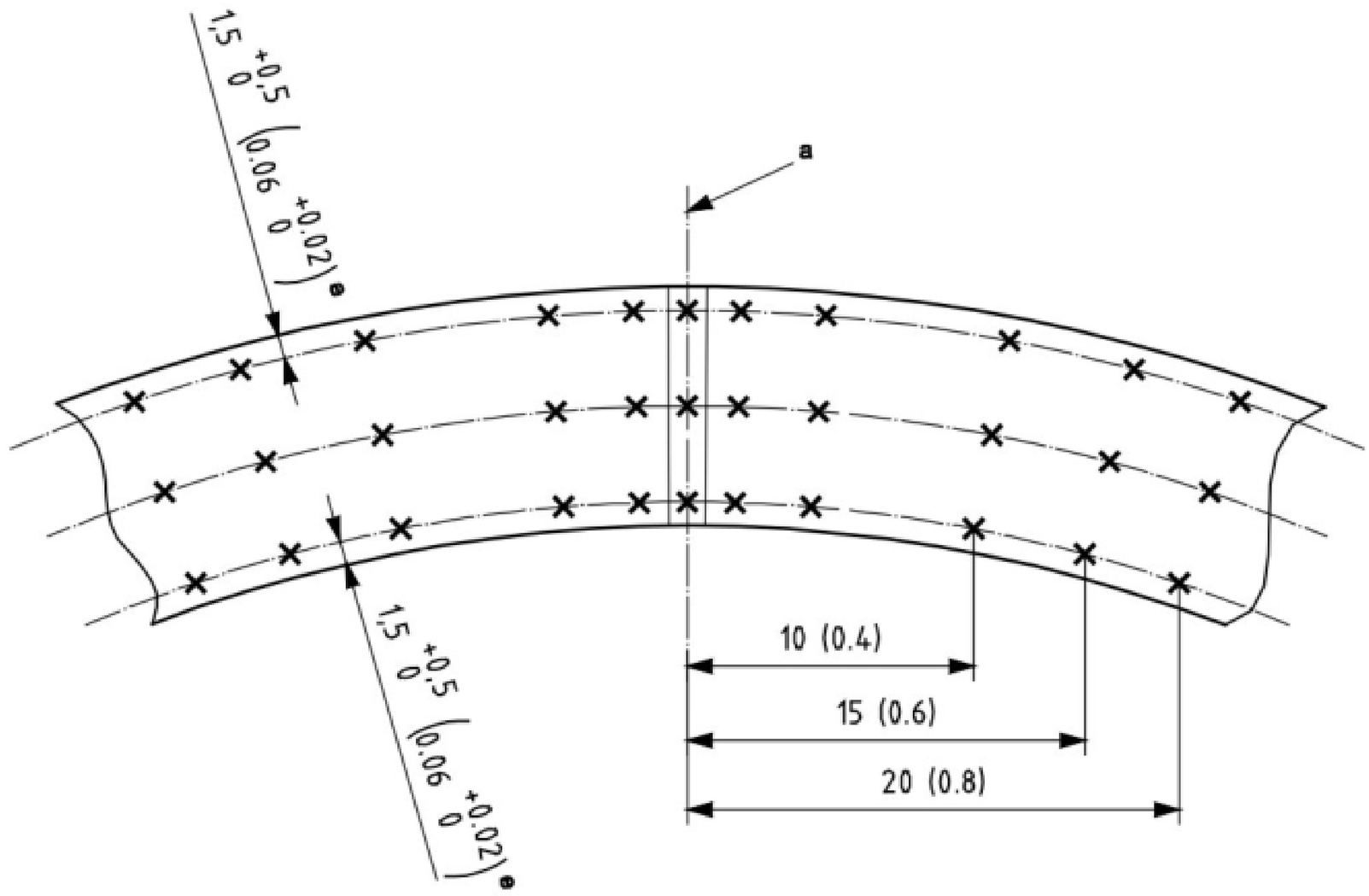

c) HFW seam-heat-treated pipe

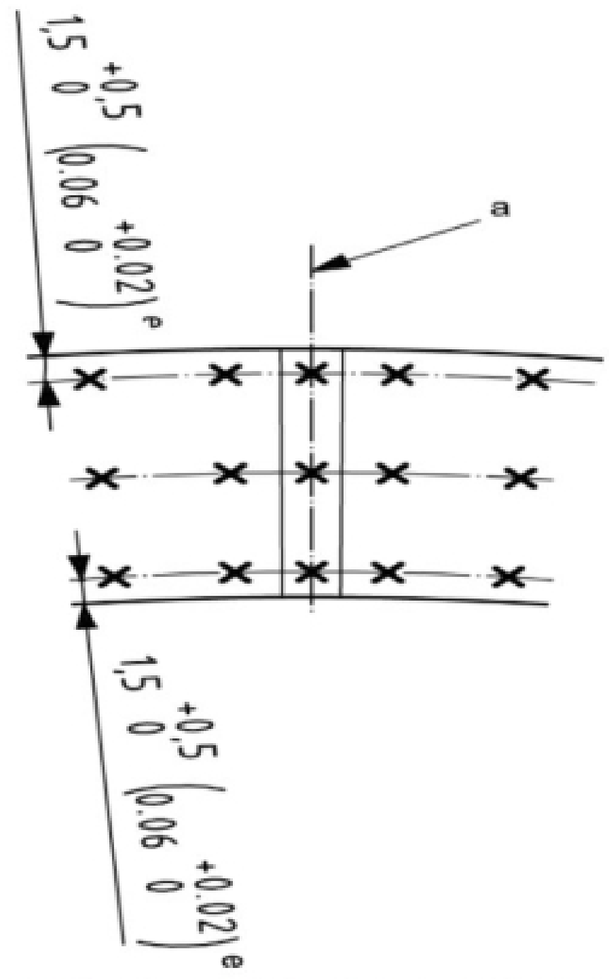

d) HFW full-body normalized or full-body quenched and tempered pipe

Key

a weld centerline
b 0.75 mm (0.03 in.) from fusion line
c 1 *t* from fusion line
d 1.0 mm (0.04 in.) spacing in visible HAZ
e from inside and outside surfaces

Figure N.1—Location of Hardness Tests *(continued)*

Annex O
(informative)

Additional Information for Use of the API Monogram by Licensees

O.1 Marking Requirements for Products

O.1.1 General

These marking requirements apply only to those API licensees wishing to mark their products with the API Monogram, in conjunction with the requirements of Annex A.

O.1.2 Product Specification Identification

The following marking requirements apply only to those API licensees wishing to mark their products with the API Monogram.

The complete API Monogram marking consists of the following:

a) the letters “Spec 5L,”

b) the manufacturer’s API license number,

c) the API Monogram, and

d) the date of manufacture (defined as the month and year when the monogram is applied by the manufacturer).

NOTE As defined in 3.1.35, the manufacturer may be, as applicable, a pipe mill, processor, maker of couplings or threader.

The API Monogram marking shall be applied only to products complying with the requirements of the specification and only by licensed manufacturers.

O.1.3 Marking of Pipe and Couplings

O.1.3.1 The API Monogram marking, as defined in O.1.2, shall be inserted in the markings described in 11.2.1 and 11.3 as applicable, following the manufacturer’s name or mark.

O.1.3.2 Following are examples of the markings listed in 11.2.1 with the API Monogram inserted where: X represents the manufacturer; #### represents the license number; Y represents the customer’s inspection representative, if applicable; and Z represents the identification number that permits the correlation of the product or delivery unit (e.g. bundled pipe) with the related inspection document, if applicable.

EXAMPLE 1 For USC units: X API Spec 5L #### (API) (MO-YR) 20 0.500 X52M PSL 2 SAWL Y Z

EXAMPLE 2 For SI units: X API Spec 5L #### (API) (MO-YR) 508 12.7 L360M PSL 2 SAWL Y Z

O.1.3.3 For cases where the pipe also meets the requirements of a compatible standard "ABC," the following are examples of the markings listed in 11.2.1 with the API Monogram inserted where: X represents the manufacturer; #### represents the license number; Y represents the customer's inspection representative, if applicable; and Z represents the identification number that permits the correlation of the product or delivery unit (e.g. bundled pipe) with the related inspection document, if applicable.

EXAMPLE 3 For USC units: X API Spec 5L #### (API) (MO-YR) / ABC 20 0.500 X52M PSL 2 SAWL Y Z

EXAMPLE 4 For SI units: X API Spec 5L #### (API) (MO-YR) / ABC 508 12.7 L360M PSL 2 SAWL Y Z

O.1.4 Bundle Identification

O.1.4.1 For pipe of size 48.3 mm (1.900 in.) or smaller, the identification markings specified in 11.2.1 shall be placed on the tag, strap, or clip used to tie the bundle as described in 11.2.3.

For example, size 48.3mm (1.900 in.), specified wall thickness 3.7 mm (0.145 in.), Grade B, high-frequency welded, plain-end pipe should be marked as follows, using the values that are appropriate for the pipe dimensions specified on the purchase order:

EXAMPLE 5 For USC units: X API Spec 5L #### (API) (MO-YR) 1.9 0.145 B PSL 1 HFW Y Z

EXAMPLE 6 For SI units: X API Spec 5L #### (API) (MO-YR) 48.3 3.7 L235 PSL 1 HFW Y Z

O.1.4.2 For the cases where the pipe also meets the requirements of a compatible standard ABC, the following are examples of the markings:

EXAMPLE 7 For USC units: X API Spec 5L #### (API) (MO-YR) / ABC 1.9 0.145 B PSL 1 HFW Y Z

EXAMPLE 8 For SI units: X API Spec 5L #### (API) (MO-YR) / ABC 48.3 3.7 L245 PSL 1 HFW Y Z

O.1.5 Thread Identification

At the manufacturer's option, threaded-end pipe may be identified by stamping or stenciling the pipe adjacent to the threaded ends, with the threader's API license number, the API Monogram, immediately followed by the date of threading (defined as the month and year the Monogram is applied), the specified outside diameter of the pipe, and LP to indicate the type of thread. The thread marking may be applied to products that do or do not bear the API Monogram. For example, size 168.3 mm (6.625 in.) threaded-end pipe may be marked as follows, using the value that is appropriate for the pipe outside diameter specified on the purchase order:

EXAMPLE 9 For USC units: X API Spec 5L #### (API) (MO-YR of threading) API Spec 5B 6.625 LP

EXAMPLE 10 For SI units: X API Spec 5L #### (API) (MO-YR of threading) API Spec 5B 168.3 LP

If the product is clearly marked elsewhere with the manufacturer's identification, its license number, as above, may be omitted.

O.1.6 Thread Certification

The use of the API Monogram as provided in O.1.5 shall constitute a certification by the manufacturer that the threads so marked comply with the requirements stipulated in the latest edition of API 5B but should not be construed by the purchaser as a representation that the product so marked is, in its entirety, in accordance with any API specification. Manufacturers who use the API Monogram for thread identification are required to have access to properly certified API reference master thread gages.

Annex P
(informative)

Equations for Threaded and Coupled Pipe and Background Equations for Guided-bend and CVN Test Specimens

P.1 Introduction

This annex contains equations and information specific to line pipe that were contained in API 5C3. The number designations in the brackets [xx] correspond to the equation number listed in the technical report. The P.number in the (P.x) to the right of the equations designates the equation number in this annex. For further information regarding the derivation and history of these equations, see the technical report.

P.2 Calculated Threaded and Coupled Mass [7]

The calculated threaded and coupled mass per unit length is based on a length measured from the outer face of the coupling to the end of the pipe, as shown in Figure P.1. The mill end of the coupling is assumed to be installed to the power-tight axial position.

$$w_{tc}=\{[L_j-k_{lsl}(N_L+2J)/2]\ w_{pe}+\text{ mass of coupling – mass removed in threading two pipe ends}\}/L_j \quad [76](P.1)$$

where

k_{lsl} is the length conversion factor, equal to 0.001 for SI units and $^1/_{12}$ for USC units;

J is the distance from end of pipe to center of coupling in power-tight position, in accordance with API 5B, in millimeters or inches;

L_j is the length of a standard piece of pipe, in meters or feet;

N_L is the coupling length, in millimeters or inches;

w_{tc} is the threaded and coupled mass per unit length;

w_{pe} is the plain-end mass per unit length, in kilograms per meter or pounds per foot.

---

[7] From API 5C3.

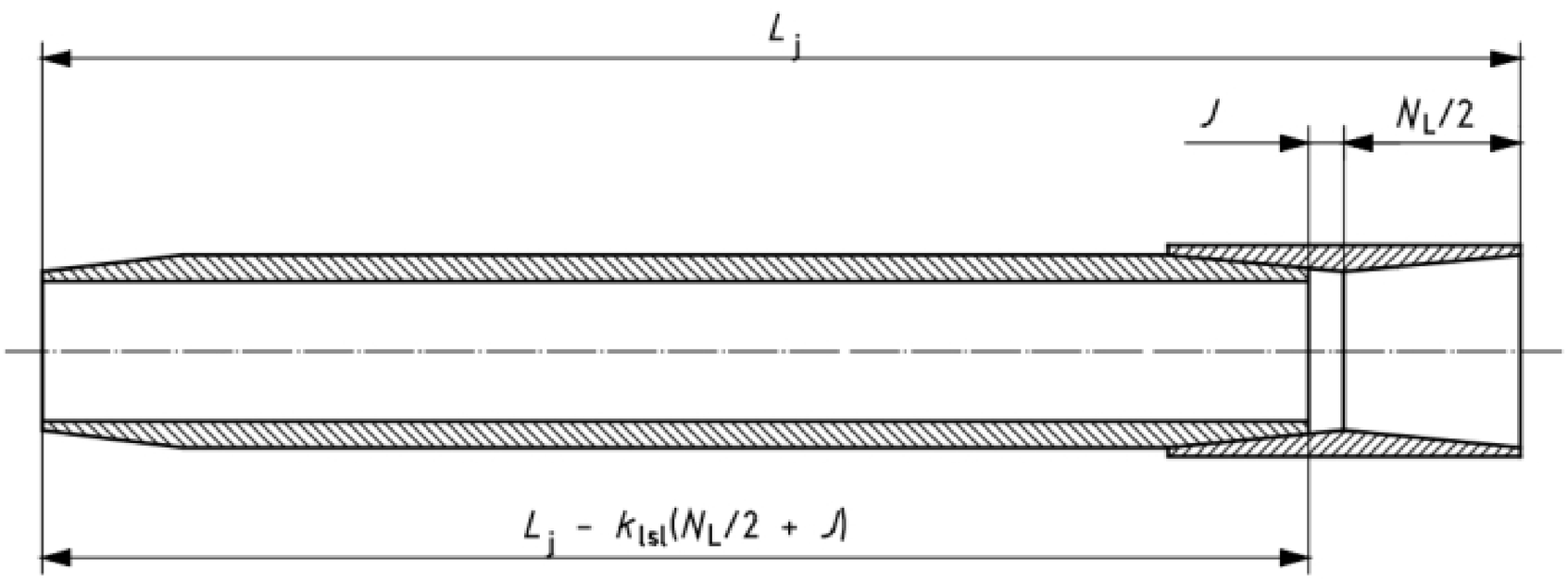

Key

L_j length of standard piece of pipe, in meters or feet

N_L coupling length, in accordance with Table F.1, in millimeters or inches

J distance from end of pipe to center of coupling in power-tight position, in accordance with API 5B

k_{lsl} length conversion factor, equal to 0.001 for SI units and $^1/_{12}$ for USC units

Figure P.1—Threaded and Coupled Pipe

P.3 Calculated Finished-end Mass [8]

Standards use the calculated mass gain (or loss) due to end finishing, e_m, to calculate the theoretical mass of a length of pipe; values of e_m given in standards are calculated from Equation (P.2). For plain-end pipe, $e_m = 0$.

$$e_m = L_j\,(w - w_{pe}) \qquad [74](P.2)$$

where

e_m is the mass gain due to end finishing, in kilograms or pounds;

L_j is the length of a standard piece of pipe, in meters or feet;

w is the calculated threaded and coupled mass (w_{tc}), upset and threaded mass (w_{ij}), or upset mass (w_u) based on length L_j, in kilograms per meter or pounds per foot;

w_{pe} is the plain-end mass per unit length, in kilograms per meter or pounds per foot.

The finished-end mass of a joint is calculated using Equation (P.3).

$$W_L = w_{pe}L_{ef} + k_m\,e_m \qquad [75](P.3)$$

[8] From API 5C3.

where

e_m is the mass gain due to end finishing, in kilograms or pounds;

k_m is the mass correction factor: 1.000 for carbon steel, 0.989 for martensitic chromium steel;

L_{ef} is the length of pipe including end finish, in meters or feet;

W_L is the calculated mass of a piece of pipe of length L, in kilograms or pounds;

w_{pe} is the plain-end mass per unit length, in kilograms per meter or pounds per foot.

P.4 Couplings without Special Bevel Mass Allowance [9]

Coupling masses for line pipe are calculated on the basis of the dimensions shown in the 1942 edition of API 5L, which are identical with those shown in the 1971 edition of API 5L.

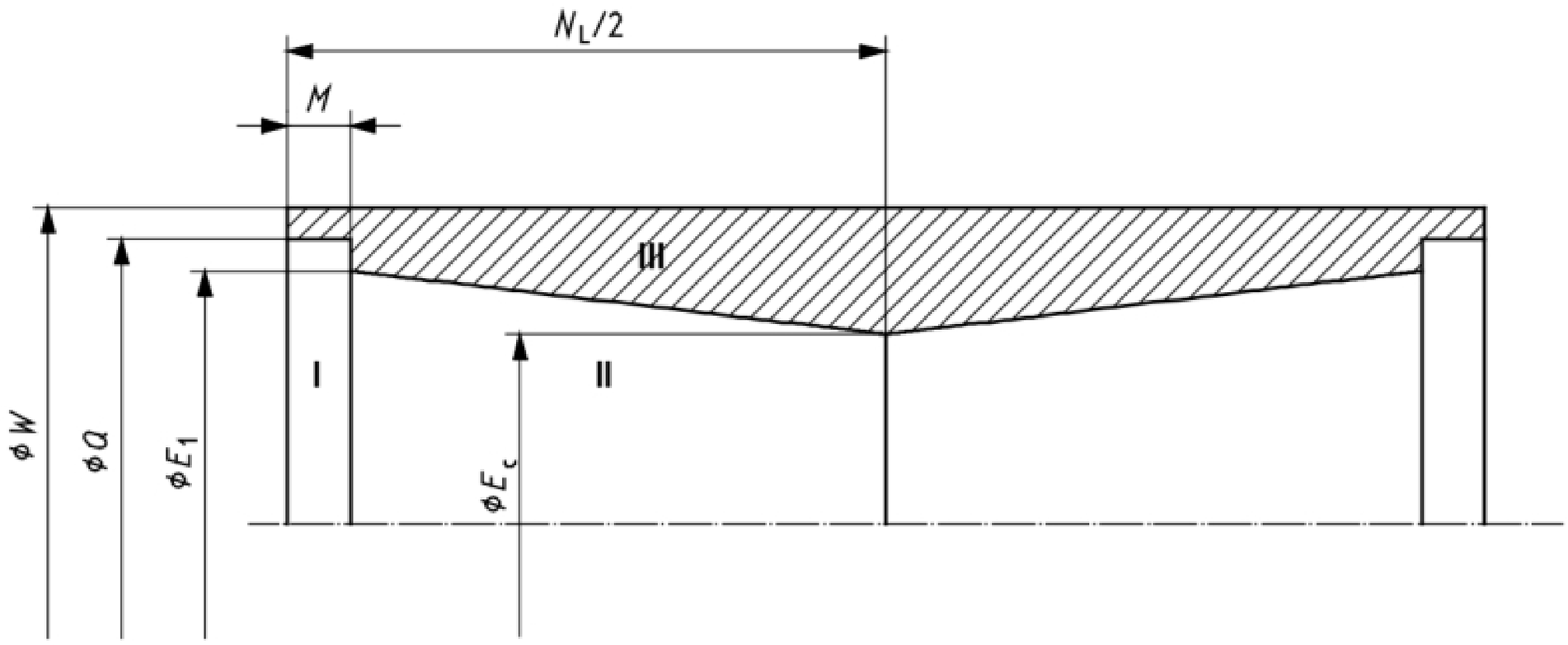

Key

N_L coupling length, in accordance with Table F.1, in millimeters or inches

M length from the face of the coupling to the hand-tight plane for line pipe, in accordance with API 5B

W specified coupling outside diameter, in accordance with Table F.1

Q diameter of coupling recess, in accordance with API 5B

E_1 pitch diameter at the hand-tight plane, in accordance with API 5B

E_c pitch diameter, at center of coupling

I, II, III represent Volumes I, II, III, respectively [see Equations (P.6), (P.7), and (P.9)]

Figure P.2—Pipe Coupling

$$m_c = 0.566\ 6k_m \text{ (Vol III)} \qquad [82](P.4)$$

$$E_c = E_1 - (N_L/2 - M)\ T_d \qquad [83](P.5)$$

[9] From API 5C3.

$$\text{Vol I} = 0.785\ 4MQ^2 \qquad [84](P.6)$$

$$\text{Vol II} = 0.261\ 8\ (N_L/2 - M)(E_1^2 + E_1E_c + E_c^2) \qquad [85](P.7)$$

$$\text{Vol (I + II + III)} = 0.785\ 4N_L\ W^2/2 \qquad [86](P.8)$$

$$\text{Vol III} = \text{Vol (I + II + III)} - \text{Vol I} - \text{Vol II} \qquad [87](P.9)$$

where

k_m is the mass correction factor: 1.000 for carbon steel, 0.989 for martensitic chromium steel;

m_c is the coupling mass;

T_d is the taper, 0.0625.

Calculations for coupling masses are expressed in pounds. The final calculated mass is rounded to two decimals with no intermediate rounding in the calculations.

P.5 Pressure Performance for Couplings [10]

P.5.1 General

Internal pressure capacity for threaded and coupled pipe is the same as for plain-end pipe, except where a lower pressure is required to avoid yielding the coupling or leakage due to insufficient internal pressure leak resistance at the E_1 plane as calculated below.

P.5.2 Internal Yield Pressure of Line Pipe Couplings

The internal yield pressure for the coupling is calculated from:

$$p_{iYc} = f_{ymnc}\ (W - d_1)/W \qquad [66](P.10)$$

where

f_{ymnc} is the specified minimum yield strength of the coupling;

p_{iYc} is the internal pressure at yield for coupling;

W is the specified coupling outside diameter, in accordance with Table F.1;

d_1 is the diameter at the root of the coupling thread at the end of the pipe in the power-tight position.

$$d_1 = E_1 - (L_1 + A)T_d + H - 2s_m \qquad [67](P.11)$$

[10] From API 5C3.

where

A is the hand-tight standoff, mm (in.);

E_1 is the pitch diameter at the hand-tight plane, in accordance with API 5B;

H is the thread height equivalent Vee thread, 2.1996 mm (0.08660 in.) for 10 TPI, 2.7496 mm (0.10825 in.) for 8 TPI;

Threads per 25.4 mm (threads per inch)	f_{rn} mm (in.)	H mm (in.)
27	0.031 (0.0012)	0.815 (0.0321)
18	0.046 (0.0018)	1.222 (0.0481)
14	0.061 (0.0024)	1.572 (0.0619)
11 ½	0.074 (0.0029)	1.913 (0.0753)
8	0.014 (0.0041)	2.784 (0.1082)

L_1 is the length from the end of the pipe to the hand-tight plane, in accordance with API 5B;

s_{rn} is the root truncation of the pipe thread of round threads, 0.36 mm (0.014 in.) for 10 TPI, 0.43 mm (0.017 in.) for 8 TPI;

T_d is the taper (on diameter), 0.0625 mm/mm (0.0625 in./in.).

P.5.3 Internal Pressure Leak Resistance of Round Thread or Buttress Couplings

The internal pressure leak resistance at the E_1 or E_7 plane is calculated from Equation (P.12). Equation (P.12) is based on the seal being at the E_1 plane for round threads and the E_7 plane for buttress threads where the coupling is the weakest and the internal pressure leak resistance the lowest. Also, Equation (P.12) is based on the internal leak resistant pressure being equal to the interference pressure between the pipe and coupling threads resulting from make-up and the internal pressure itself, with stresses in the elastic range.

$$p_{iL} = \frac{ET_d N_p (W^2 - E_s^2)}{2E_s W^2} \qquad [69](P.12)$$

where

E is Young's modulus;

E_s is the pitch diameter, at plane of seal

E_1 for round thread

E_7 for buttress thread casing;

N is the number of thread turns make-up

A for round thread casing and tubing (API 5B)

$A + 1.5$ for buttress thread casing smaller than 16

$A + 1$ for buttress thread casing 16 and larger;

p is the thread pitch

3.175 mm (0.125 in.) for 8-round thread casing and tubing

2.540 mm (0.100 in.) for 10-round thread tubing

5.080 mm (0.200 in.) for buttress thread casing;

p_{iL} is the internal pressure at leak;

T_d is the taper (on diameter)

0.0625 for round thread casing and tubing

0.0625 for buttress casing smaller than 16

0.0833 for buttress thread casing 16 and larger;

W is the specified coupling outside diameter, in accordance with API 5CT [21] or ISO 11960 [6];

where

A is the hand-tight standoff, mm (in.);

E_1 is the pitch diameter at the hand-tight plane, in accordance with API 5B;

E_7 is the pitch diameter, in accordance with API 5B.

The interface pressure between the pin and box as a result of make-up is as follows:

$$p_1 = \frac{ET_d N_p (W^2 - E_s^2)(E_s^2 - d^2)}{E_s^2 (W^2 - d^2)} \qquad \text{[70](P.13)}$$

where

E is Young's modulus;

E_s is the pitch diameter, at plane of seal

E_1 for round thread

E_7 for buttress thread casing;

d is the pipe inside diameter, $d = D - 2t$;

N is the number of thread turns make-up

A for round thread casing and tubing (API 5B)

$A + 1.5$ for buttress thread casing smaller than 16

$A + 1$ for buttress thread casing 16 and larger;

p is the thread pitch

3.175 mm (0.125 in.) for 8-round thread casing and tubing

2.540 mm (0.100 in.) for 10-round thread tubing

5.080 mm (0.200 in.) for buttress thread casing;

T_d is the taper (on diameter)

0.0625 for round thread casing and tubing

0.0625 for buttress casing smaller than 16

0.0833 for buttress thread casing 16 and larger;

W is the specified coupling outside diameter, in accordance with API 5CT [21] or ISO 11960 [6];

where

A is the hand-tight standoff;

E_1 is the pitch diameter at the hand-tight plane, in accordance with API 5B;

E_7 is the pitch diameter, in accordance with API 5B;

D is the specified pipe outside diameter;

t is the specified pipe wall thickness.

Subsequent to make-up, internal pressure, p_i, causes a change in the interface pressure by an amount p_2:

$$p_2 = \frac{p_i d^2 (W^2 - E_s{}^2)}{E_s{}^2 (W^2 - d^2)} \qquad [71](P.14)$$

where

E_s is the pitch diameter, at plane of seal

E_1 for round thread

E_7 for buttress thread casing;

d is the pipe inside diameter, $d = D - 2t$;

p_i is the internal pressure;

W is the specified coupling outside diameter, in accordance with API 5CT [21] or ISO 11960 [6];

where

E_1 is the pitch diameter at the hand-tight plane, in accordance with API 5B;

E_7 is the pitch diameter, in accordance with API 5B;

D is the specified pipe outside diameter;

t is the specified pipe wall thickness.

Since the external box diameter is always greater than the contact diameter, which, in turn, is always greater than the internal pipe diameter, p_2 will always be less than p_1. Therefore, when the total interface pressure $p_1 + p_2$ equals the internal pressure p_i, the connection has reached the leak resistance limit p. In other words, if p_i were greater than $p_1 + p_2$, leakage would occur:

$$p_1 + p_2 = p_i = p \qquad [72](P.15)$$

Substituting the appropriate values for p_1 and p_2 into Equation (P.15) and simplifying produces Equation (P.12).

P.6 Hydrostatic Test Pressure for Threaded and Coupled Pipe [11]

The hydrostatic test pressure for threaded and coupled pipe is the same as for plain-end pipe, except where a lower pressure is required to avoid leakage due to insufficient internal yield pressure of the coupling or insufficient internal pressure leak resistance at the E_1 plane as calculated in P.5.

The test pressure should be based on the lowest of the test pressure determined for plain-end pipe (Table 26), or 80 % of the internal coupling yield pressure result from Equation (P.10), or the internal pressure leak resistance result from Equation (P.12). The basis for this equation was adopted at the 1968 API Standardization Conference.

P.7 Background on Guided-bend Test [12]

This section provides the supporting background for the requirements in 10.2.4.6.

Values for ε are based on the actions of the 1967 API Standardization Conference except for Grade X70, which were adopted at the June 1972 API Standardization Conference. The values calculated by means of Equations (P.16) (for SI) and (P.17) (for USC) are rounded to the nearest multiple of 0.0025 with the exception of the values for grades X52 and X56, which are rounded to the next higher multiple of 0.0025.

The engineering strain, ε, is calculated as follows:

$$\varepsilon = \frac{3000(0.64)^{0.2}}{(145 \cdot f_{\text{umnp}})^{0.9}} \qquad [148](P.16)$$

or

$$\varepsilon = \frac{3000(0.64)^{0.2}}{f_{\text{umnp}}^{0.9}} \qquad [148](P.17)$$

where

f_{umnp} is the specified minimum tensile strength of the pipe body, expressed in megapascals (pounds per square inch).

Derivation of the guided-bend test equation is covered in API 5C3.

---

[11] From API 5C3.

[12] From API 5C3.

P.8 Background on CVN Specimen Sizes [13]

P.8.1 Calculations for Minimum Wall Thickness for Standard CVN Specimens

This section presents Equations (P.18) (for SI) and (P.19) (for USC) for determining the minimum size transverse specimen that can be obtained from a given size and wall thickness of pipe. See 10.2.3.3 and Table 22.

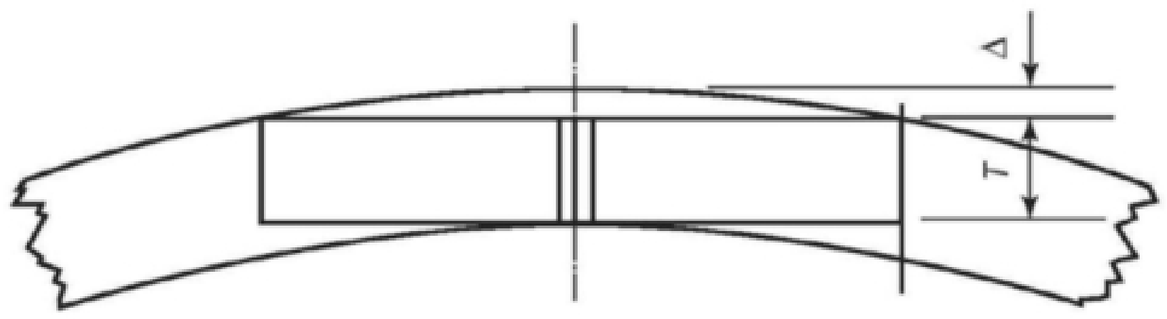

Transverse

$$\Delta = \frac{D}{2} - \left(\left(\frac{D}{2} \right)^2 - (27.5)^2 \right)^{\frac{1}{2}} \quad \text{(P.18)}$$

or

$$\Delta = \frac{D}{2} - \left(\left(\frac{D}{2} \right)^2 - (1.083)^2 \right)^{\frac{1}{2}} \quad \text{(P.19)}$$

Minimum wall thickness, mm (in.) (with no machining allowance)

where

D is the outside diameter, mm (in.);

Δ is tangential dimension from the OD to the intersection of the exposed OD Charpy shoulder and the end of the specimen (see Figure P.4), mm (in.);

T is the Charpy specimen thickness, mm (in.)

10.0 mm (0.394 in.) for full-size specimens,

7.5 mm (0.295 in.) for three-quarter-size specimens,

6.67 mm (0.262 in.) for two-third-size specimens,

5.0 mm (0.197 in.) for one-half-size specimens.

Figure P.3—Determination of Minimum Wall Thickness for Charpy Standard V-Notch Specimens

To allow for machining, add 0.5 mm (0.020 in.) to each unfinished surface, or 1.0 mm (0.040 in.) to each minimum wall thickness.

---

[13] From API 5C3.

P.8.2 Calculations for Minimum Wall Thicknesses for Tapered CVN Specimens

Figure P.4, Equations (P.20) (for SI) and (P.21) (for USC), and Equations (P.22) (for SI) and (P.23) (for USC) are used for determining the size of tapered specimens. See 10.2.3.3 that references ASTM A370 that allows tapered specimens.

NOTE The USC equations convert to the wall thickness values of Table 22 within-rounding tolerances due to the back conversion from SI.

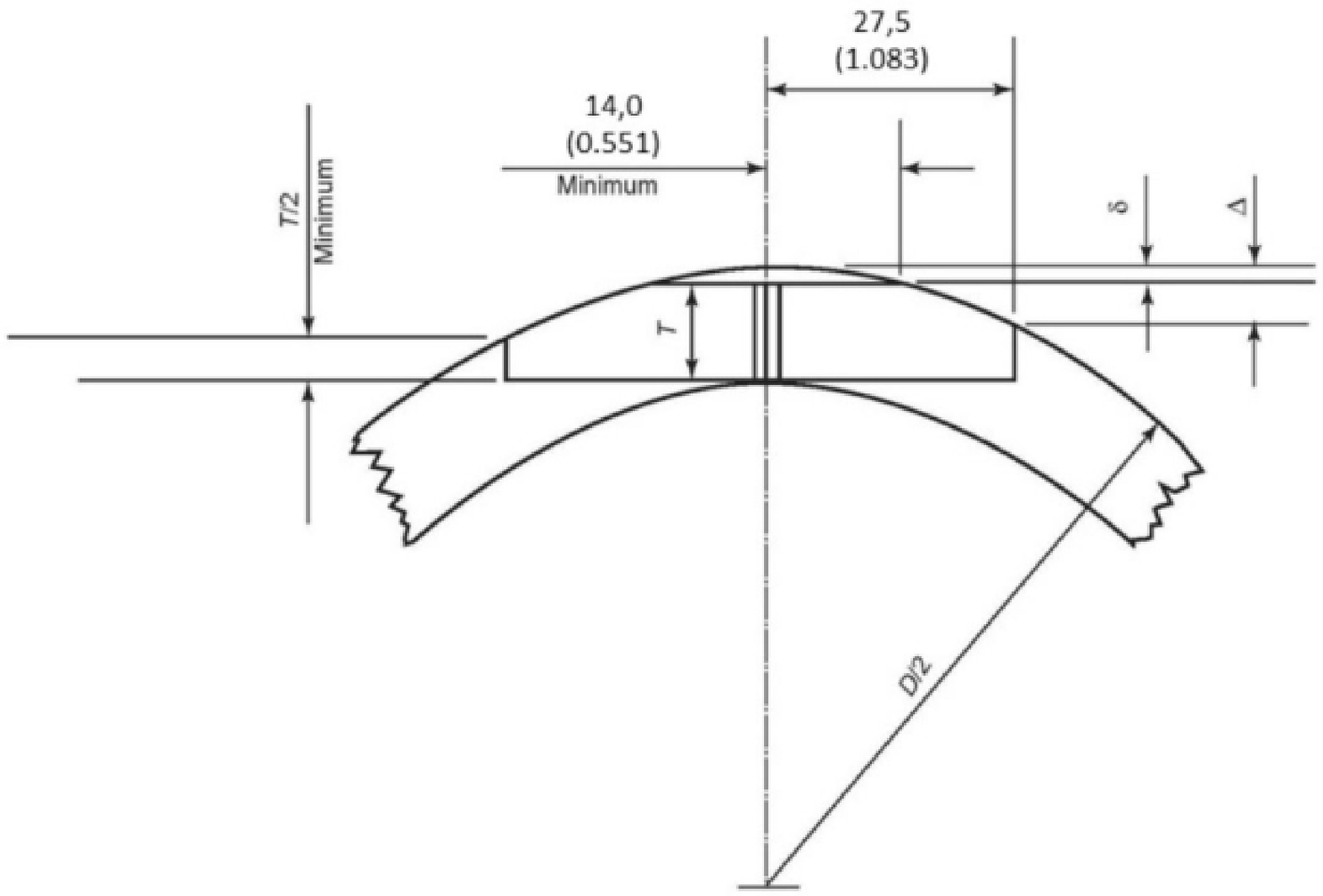

where

D is the outside diameter, mm (in.);

Δ is the tangential dimension from the OD to the intersection of the exposed OD Charpy shoulder and the end of the specimen, mm (in.);

δ is the machined depth from the OD to the Charpy surface at mid-specimen length, mm (in.);

T is the Charpy specimen thickness, mm (in.)

10.0 mm (0.394 in.) for full-size specimens,

7.5 mm (0.295 in.) for three-quarter-size specimens,

6.67 mm (0.262 in.) for two-third-size specimens,

5.0 mm (0.197 in.) for one-half-size specimens.

$$\Delta = \frac{D}{2} - \left(\left(\frac{D}{2} \right)^2 - (27.5)^2 \right)^{\frac{1}{2}} \qquad \text{(P.20)}$$

Figure P.4—Determination of Minimum Wall Thickness for Tapered CVN Specimens

or

$$\Delta = \frac{D}{2} - \left(\left(\frac{D}{2} \right)^2 - (1.083)^2 \right)^{\frac{1}{2}} \quad \text{(P.21)}$$

$$\delta = \frac{D}{2} - \left(\left(\frac{D}{2} \right)^2 - (14.0)^2 \right)^{\frac{1}{2}} \quad \text{(P.22)}$$

or

$$\delta = \frac{D}{2} - \left(\left(\frac{D}{2} \right)^2 - (0.551)^2 \right)^{\frac{1}{2}} \quad \text{(P.23)}$$

Minimum wall thickness (with no machining allowance) for tapered CVN specimens is the larger of MinWT1 and MinWT2. To allow for machining of unfinished surfaces, add 0.5 mm (0.020 in.) to each minimum wall thickness,

where

MinWT1 = $\delta + T$,

MinWT2 = $\Delta + T/2$.

Figure P.4—Determination of Minimum Wall Thickness for Tapered CVN Specimens *(continued)*

Bibliography

[1] ASTM E29-04 [14], *Standard Practice for Using Significant Digits in Test Data to Determine Conformance with Specifications*

[2] ISO/TS 29001 [15], *Petroleum, petrochemical and natural gas industries — Sector-specific quality management systems — Requirements for product and service supply organizations*

[3] API Specification Q1, *Specification for Quality Programs for the Petroleum and Natural Gas Industry*

[4] ISO 9001, *Quality management systems — Requirements*

[5] ISO 11961, *Petroleum and natural gas industries — Steel pipes for use as drill pipe — Specification*

[6] ISO 11960, *Petroleum and natural gas industries — Steel pipes for use as casing or tubing for wells*

[7] ISO 4200, *Plain end steel tubes, welded and seamless — General tables of dimensions and masses per unit length*

[8] ASME B36.10M [16], *Welded and Seamless Wrought Steel Pipe*

[9] ISO 6761, *Steel tubes — Preparation of ends of tubes and fittings for welding*

[10] Re, G., Pistone, G., Vogt, G., Demofonti, G. and Jones, G.G. [17] *EPRG Recommendation for Crack Arrest Toughness in Gas Transmission Pipelines* — 3R International 10-11/1995, pp. 607–611

[11] Dawson, J. and Pistone, G. *Probabilistic Evaluation of the Safety Embodied in the EPRG Recommendations for Shear Arrest Toughness* — 3R International, 10-11/1998, pp. 728–733

[12] Eiber, R.J., Bubenik, T.A. and Maxey, W.A. [18] *Fracture Control Technology for Natural Gas Pipelines*, NG-18 Report No: 208, PR-3-9113, December 1993

[13] Eiber, R.J., Leis, B., Carlson, L., Horner, N. and Gilroy-Scott, A. *Full Scale Tests Confirm Pipe Toughness for North American Pipeline*, Oil & Gas Journal, 97 (45), November 8, 1999

[14] American Iron and Steel Institute. [19] *Running Shear Fractures in Line Pipe: Subcommittee Summary Report of AISI Committee of Large Diameter Line Pipe Producers*, September 1, 1974

[15] EFC Publication 16 [20], *Guidelines on Materials Requirements for Carbon and Low Alloy Steels for H_2S-containing Environments in Oil and Gas Production*

---

[14] ASTM International, 100 Barr Harbor Drive, West Conshohocken, Pennsylvania 19428, https://www.astm.org.

[15] International Organization for Standardization, Chemin de Blandonnet 8, CP 401, 1214 Vernier, Geneva, Switzerland, www.iso.org.

[16] American Society of Mechanical Engineers, Two Park Avenue, New York, New York 10016, https://www.asme.org.

[17] European Pipeline Research Group. EPRG e.V., c/o Salzgitter Mannesmann Forschung, GmbH, Ehinger Strasse 200, D-47259 Duisburg, Germany, www.eprg.net.

[18] Pipeline Research Council International, 15059 Conference Center Drive, Suite 130, Chantilly, Virginia 20151, https://www.prci.org.

[19] American Iron and Steel Institute, 680 Andersen Drive, Pittsburgh, Pennsylvania 15220, http://www.steel.org.

[20] Maney Publishing, Suite 1C, Joseph's Well Hanover, Walk Leeds, LS3 1AB, United Kingdom, http://www.maneypublishing.com.

[16] DNV-OS-F101 [21], *Submarine Pipeline Systems*

[17] API Specification 5L, 43rd Edition, March 2004, *Specification for Line Pipe*

[18] API Recommended Practice 5L1, *Railroad Transportation of Line Pipe*

[19] API Recommended Practice 5LW, *Recommended Practice for Transportation of Line Pipe on Barges and Marine Vessels*

[20] NACE MR0175 [22]/ISO 15156-1, *Petroleum and Natural Gas Industries — Materials for Use in H_2S-containing Environments in Oil and Gas Production — Part 1: General Principles for Selection of Cracking-resistant Materials*

[21] API Specification 5CT, *Casing and Tubing*

[22] EN 10027-2 [23], *Designation systems for steels — Part 2: Numerical system*

[23] ISO 15614-1, *Specification and qualification of welding procedures for metallic materials — Welding procedure test — Part 1: Arc and gas welding of steels and arc welding of nickel and nickel alloys*

[24] EN 287-1, *Approval testing of welders — Fusion welding — Part 1: Steels*

[25] ISO 9606-1, *Approval testing of welders — Fusion welding — Part 1: Steels*

[26] ASME Section IX, *ASME Boiler and Pressure Vessel Code — Section IX: Welding and Brazing Qualifications*

[27] Thomas, W.H., Wilder, A.B. and Clinedinst, W.O. *Development of Requirements for Transverse Ductility of Welded Pipe*, presented at the June 1967 API Standardization Conference

[28] EN 473, *Non-destructive testing — Qualification and certification of NDT personnel — General principles*

[29] ISO 15156-2:2003, *Petroleum and natural gas industries — Materials for use in H_2S-containing environments in oil and gas production — Part 2: Cracking-resistant carbon and low alloy steels, and the use of cast irons*

[30] API Technical Report 5C3, *Calculating Performance Properties of Pipe Used as Casing or Tubing*

[31] API Circular PS-1340, *Report of Meetings of the API Committee on Standardization of Tubular Goods at the 1967 Midyear Standardization Conference*

[32] API Circular PS-1360, *Report of Meetings of the API Committee on Standardization of Tubular Goods at the 1968 Standardization Conference*

[33] API Circular PS-1440, *Report of Meetings of the API Committee on Standardization of Tubular Goods at the 1972 Standardization Conference*

---

[21] Det Norske Veritas A.S., Veritasveien 1, 1363 Høvik, Norway, https://www.dnvgl.com.

[22] NACE International, 15835 Park Ten Place, Houston, Texas 77084, https://www.nace.org.

[23] European Committee for Standardization (CEN), Management Centre, Rue de la Science 23, B - 1040 Brussels, Belgium, https://www.cen.eu.



AMERICAN PETROLEUM INSTITUTE

1220 L Street, NW
Washington, DC 20005-4070
USA

202-682-8000

Additional copies are available online at www.api.org/pubs

Phone Orders:	1-800-854-7179	(Toll-free in the U.S. and Canada)
	303-397-7956	(Local and International)
Fax Orders:	303-397-2740	

Information about API publications, programs and services is available on the web at www.api.org.

Product No. G05L46